13.1 Fuses and relays 2

13.2 Layout of harnesses and their connectors 11

13.3 Grounding points layout 93

13.4 Power supply layout drawing 99

13.5 System circuit diagram 102

Details on the Front Engine Compartment Fuse Relay

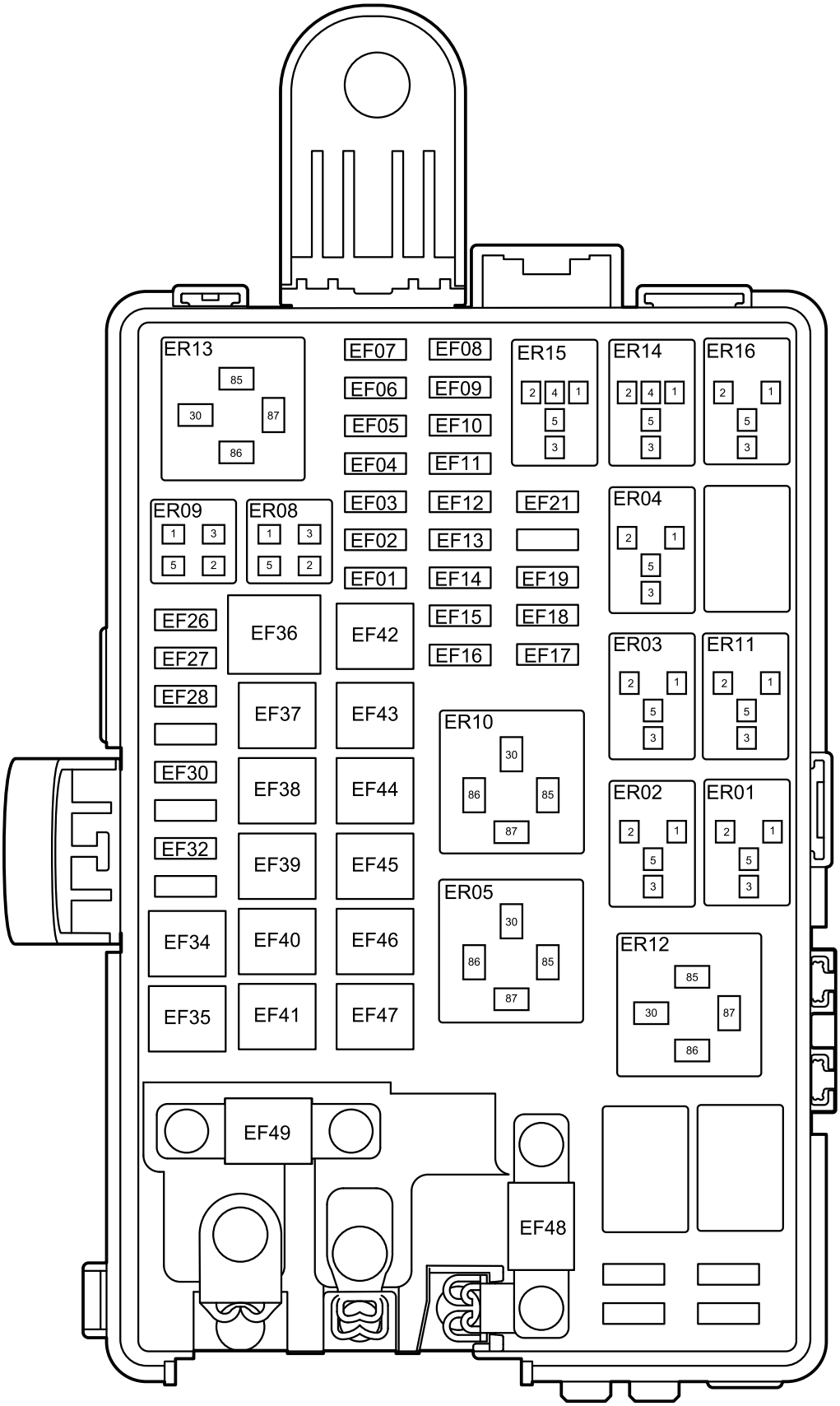

No.	Name	Specifications	Description
EF01	Transmission control unit fuse	20A	-
EF02	Brake lamp switch fuse	5A	-
EF03	Engine control module power fuse	10A	-
EF04	Brake vacuum pump fuse	30A	-
EF05	Fuel pump fuse	15A	-
EF06	Fuse of exterior lamp power supply 1	30A	Body control module
EF07	Horn fuse	15A	-
EF08	Sensor fuse	15A	Engine system solenoid valve
EF09	Oxygen sensor fuse	10A	-
EF10	Ignition coil fuse	15A	-
EF11	Fuse for main relay power supply of engine control module	15A	Models with JLF-3G10T or JLC-4G15B
EF11	Fuse for main relay power supply of engine control module	20A	Models with BHE15-AFD
EF12	Injection nozzle fuse	10A	-
EF13	Relay coil fuse	5A	-
EF14	Canister shutoff valve fuse	5A	-
EF15	Brake lamp switch fuse	5A	-
EF16	Starting feedback fuse	5A	-
EF17	Headlamp adjustment motor fuse	5A	-
EF18	Electronic stability control (ESC) system/ Brake anti-lock control module/Electronic parking brake IG1 fuse	5A	-
EF19	Engine control module /Transmission control unit IG1 fuse	7.5A	-
EF21	Rearview mirror heating fuse	7.5A	-
EF26	A/C compressor fuse	10A	-
EF27	Front defroster/Nozzle fuse	10A	-
EF28	Front wiper fuse	30A	-
EF30	Battery sensor fuse	5A	-
EF32	Front seat heating fuse	15A	-
EF34	Rear defroster fuse	40A	-
EF35	High-speed fan fuse	40A	Models with JLC-4G15B
EF35	Electronic parking brake motor fuse	30A	Models with JLF-3G10T or BHE15-AFD (with independent fuse for the electronic parking brake)
EF36	High-speed fan fuse	60A	Models with JLF-3G10T or BHE15-AFD

No.	Name	Specifications	Description
EF36	Instrument box fuse	50A	Models with JLC-4G15B (with independent fuse for the electronic parking brake)
EF37	Window 1 fuse	30A	Body control module, window lifter control module, ripple anti-pinch module
EF38	Blower fuse	40A	-
EF39	Power seat fuse	30A	-
EF40	Low-speed fan fuse	30A	Models with JLC-4G15B
EF40	Low-speed fan fuse	40A	Models with JLF-3G10T or BHE15-AFD
EF41	Window 2 fuse	30A	Body control module, window lifter control module, ripple anti-pinch module, window control module
EF42	Left electronic parking brake motor fuse	30A	With independent fuse for the electronic parking brake
EF43	Instrument box 1 fuse	50A	Models with JLF-3G10T, models with JLC-4G15B and models with BHE15-AFD (without independent fuse for the electronic parking brake)
EF43	Electronic parking brake motor fuse	30A	Models with JLC-4G15B (with independent fuse for the electronic parking brake)
EF44	Starter fuse	30A	-
EF45	Anti-lock braking control module/ Electronic stability control system pump fuse	25A	-
EF45	Anti-lock braking control module/ Electronic stability control system pump fuse	40A	-
EF46	Electronic stability control (ESC) system/ Brake anti-lock control module motor fuse	40A	-
EF47	Instrument box 2 fuse	60A	-
EF48	Electric power steering fuse	80A	-
EF49	Alternator fuse	150A	-
ER01	Start-up relay 1	-	Models with PEPS
ER02	Start-up relay 2	-	-
ER03	Brake vacuum pump relay	-	-
ER04	Fuel pump relay	-	-
ER05	Main relay	-	-
ER08	Horn relay	-	-
ER09	A/C compressor relay	-	-

No.	Name	Specifications	Description
ER10	Blower motor relay	-	-
ER11	Front defroster/Nozzle relay	-	-
ER12	Low-speed fan relay	-	-
ER13	High-speed fan relay	-	-
ER14	High-speed wiper relay	-	-
ER15	Low-speed wiper relay	-	-
ER16	Rear defroster relay	-	-

Interior Fuse Relay Details

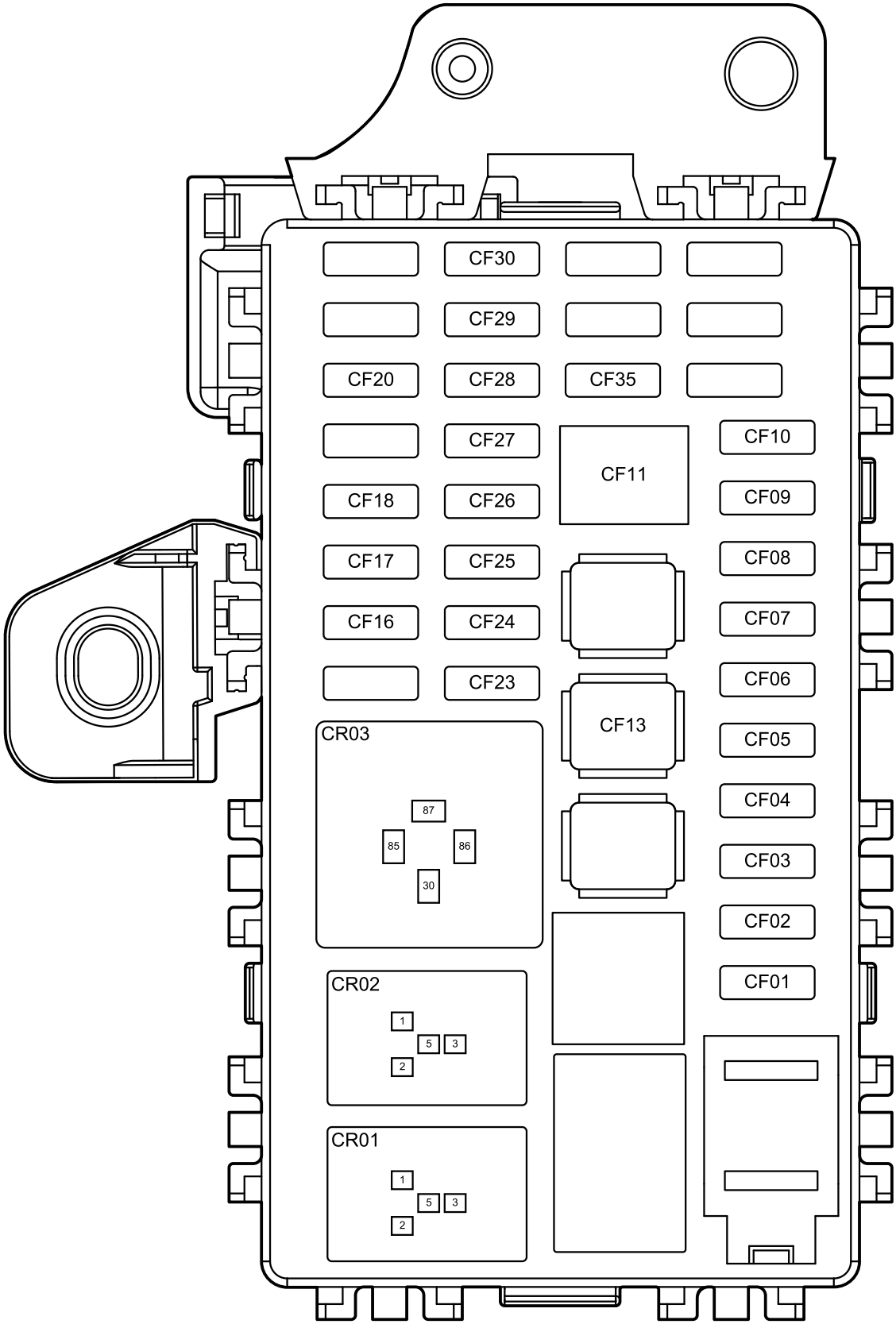

No.	Name	Specifications	Description
CF01	Panoramic image fuse	5A	Models with CVT
CF01	Electronic steering column lock fuse	15A	Models with 5MT
CF02	Fuse of exterior lamp power supply 2	30A	Body control module
CF03	AM1/AM2 fuse	10A	Ignition switch
CF04	Front washer fuse	15A	Body control module
CF05	Door lock motor fuse	30A	Body control module
CF06	Fuse for combination switch /Radio frequency receiving control module/Clock spring	10A	-
CF07	Gateway/Anti-theft coil fuse	5A	-
CF08	DLC fuse	10A	-
CF09	Turn signals power supply fuse	15A	Body control module
CF10	Body control module power fuse	20A	-
CF11	Marine insurance fuse	30A	-
CF13	Sunroof fuse	20A	-
CF16	Driving recorder/ETC/Emergency call system fuse	7.5A	-
CF17	Combination instrument / A/C / Display / Air fragrance unit / Central instrument panel switch assembly fuse	10A	-
CF18	Audio system fuse	15A	-
CF20	IG2 fuse	5A	Models with JLC-4G15B or JLF-3G10T
CF23	Gear selector AT/Electronic power steering system/Combination switch/ Electronic parking brake switch/Electronic steering lock/Left switch block IG1 fuse	7.5A	-
CF24	Airbag fuse	5A	-
CF25	Combination instrument / Gateway / ETC / A/C / Emergency call system IG1 fuse	7.5A	Body control module
CF26	Front engine compartment fuse box IG1 fuse	10A	-
CF27	Seat heating fuse	5A	-
CF28	Rear USB fuse	7.5A	Models with type I
CF28	Front-row/Second-row USB fuse	10A	Models with type II
CF29	Power outlet fuse	15A	-
CF30	Fuse for audio system/Rearview mirror switch/Driving recorder/Body control module/Around view monitor	7.5A	-
CF35	Steering wheel heating fuse	15A	-

No.	Name	Specifications	Description
CR01	IG2 relay	-	Models with JLC-4G15B or JLF-3G10T
CR02	IG1 relay	-	-
CR03	ACC relay	-	-

Details on the battery fuse relay

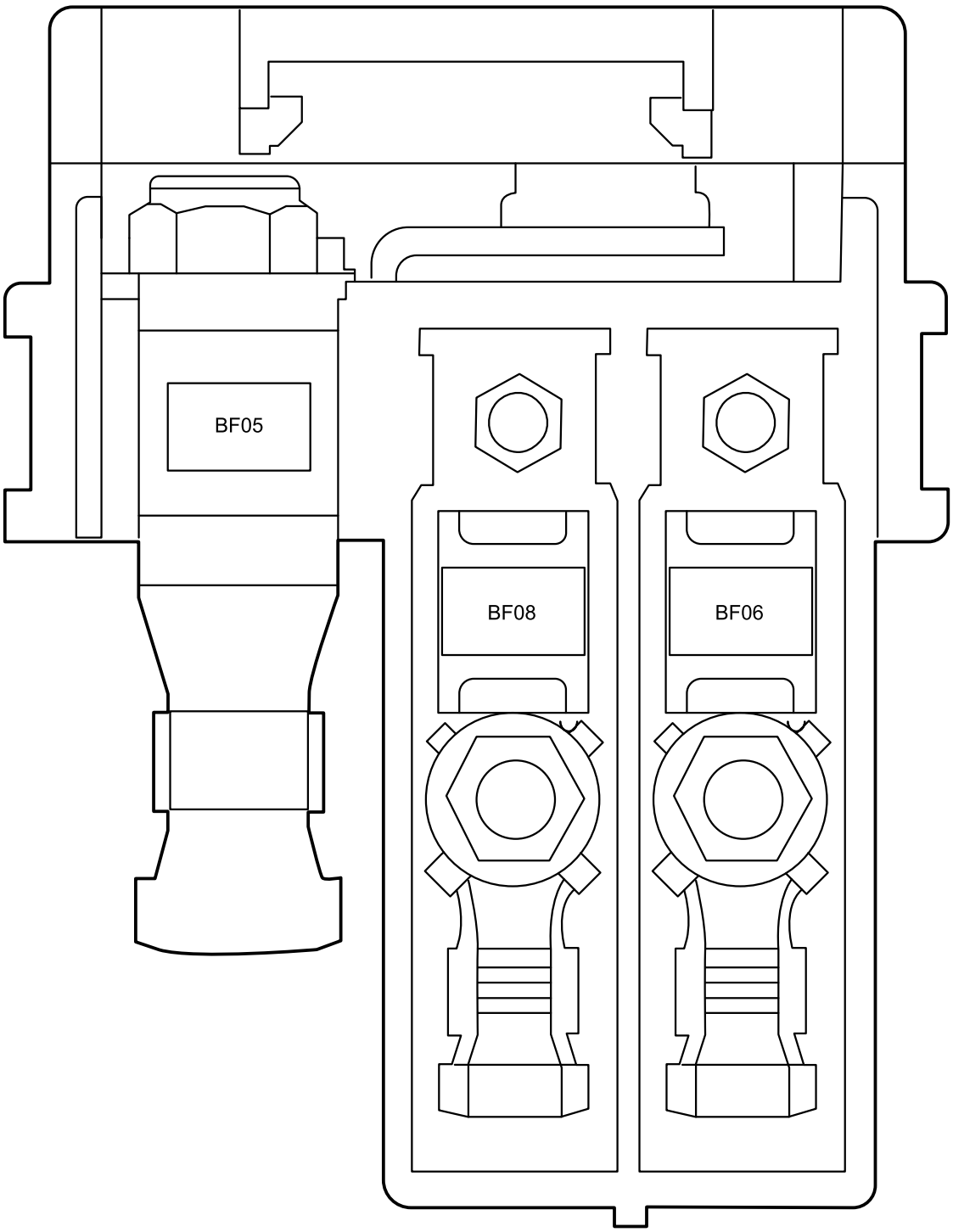

No.	Name	Specifications	Description
BF05	Starter power generation fuse	400A	Models with BHE15-AFD
BF06	Front compartment distribution box fuse	200A	Models with BHE15-AFD
BF08	Engine coolant pump fuse	60A	Models with BHE15-AFD

Battery negative harness layout drawing

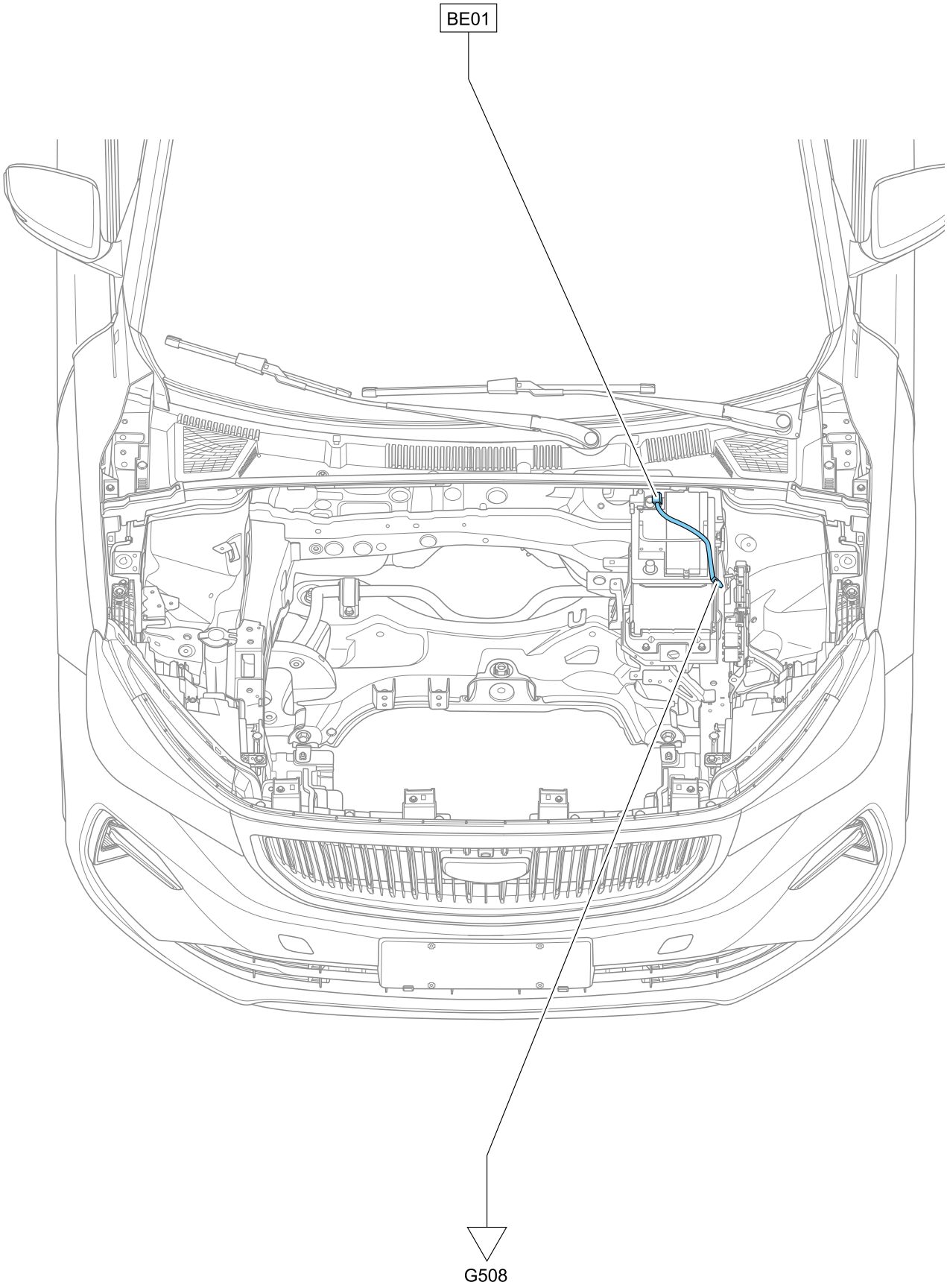

Battery negative harness connector list

Harness connector	Name	Harness connector	Name
BE01	Battery negative harness connector	-	-

13.2.1 Battery negative harness

Battery negative harness terminal definition

BE01 battery negative harness connector

Pin	Functions	Note
1	Grounding	-

G508 Battery negative harness grounding

Front engine compartment harness layout drawing

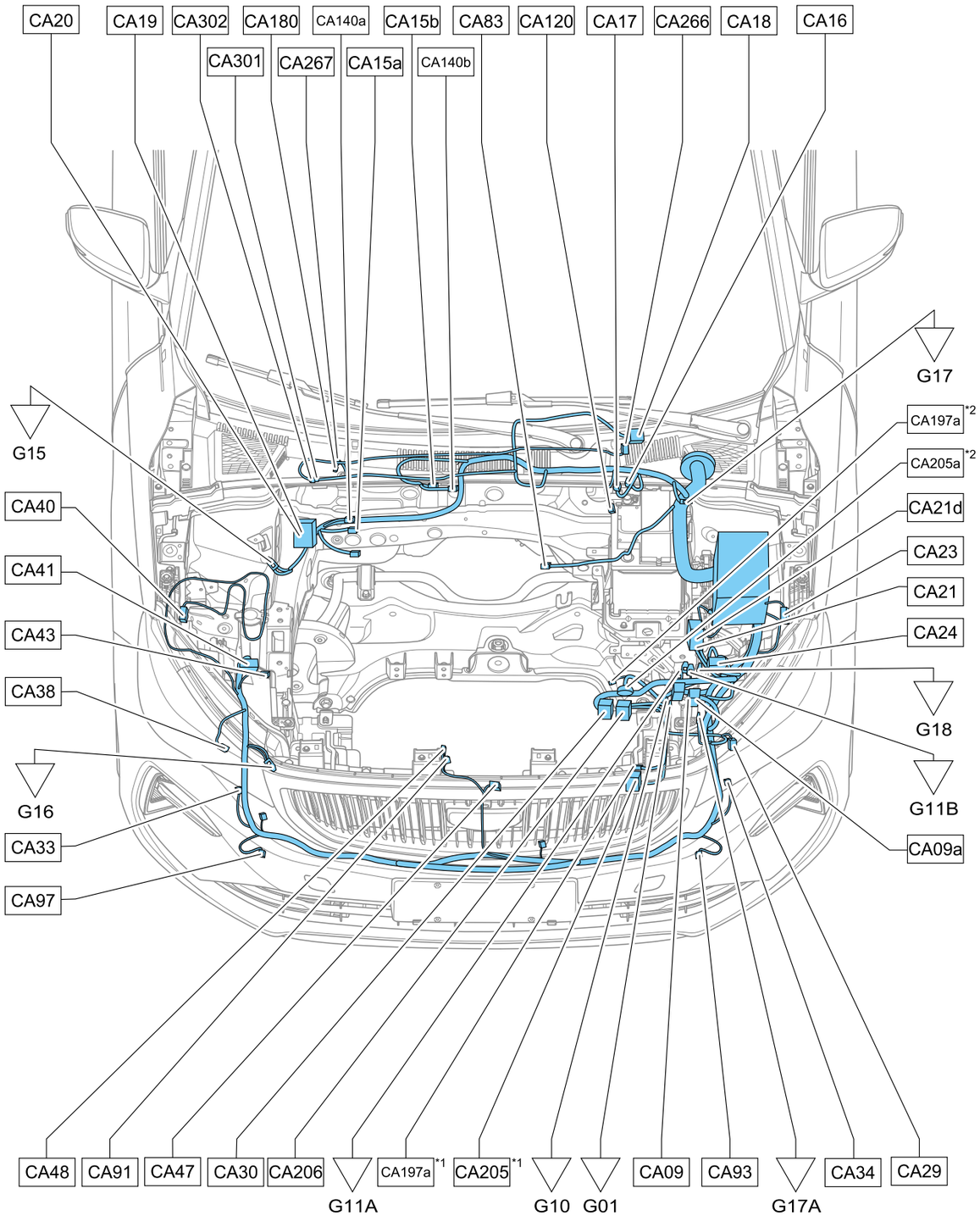

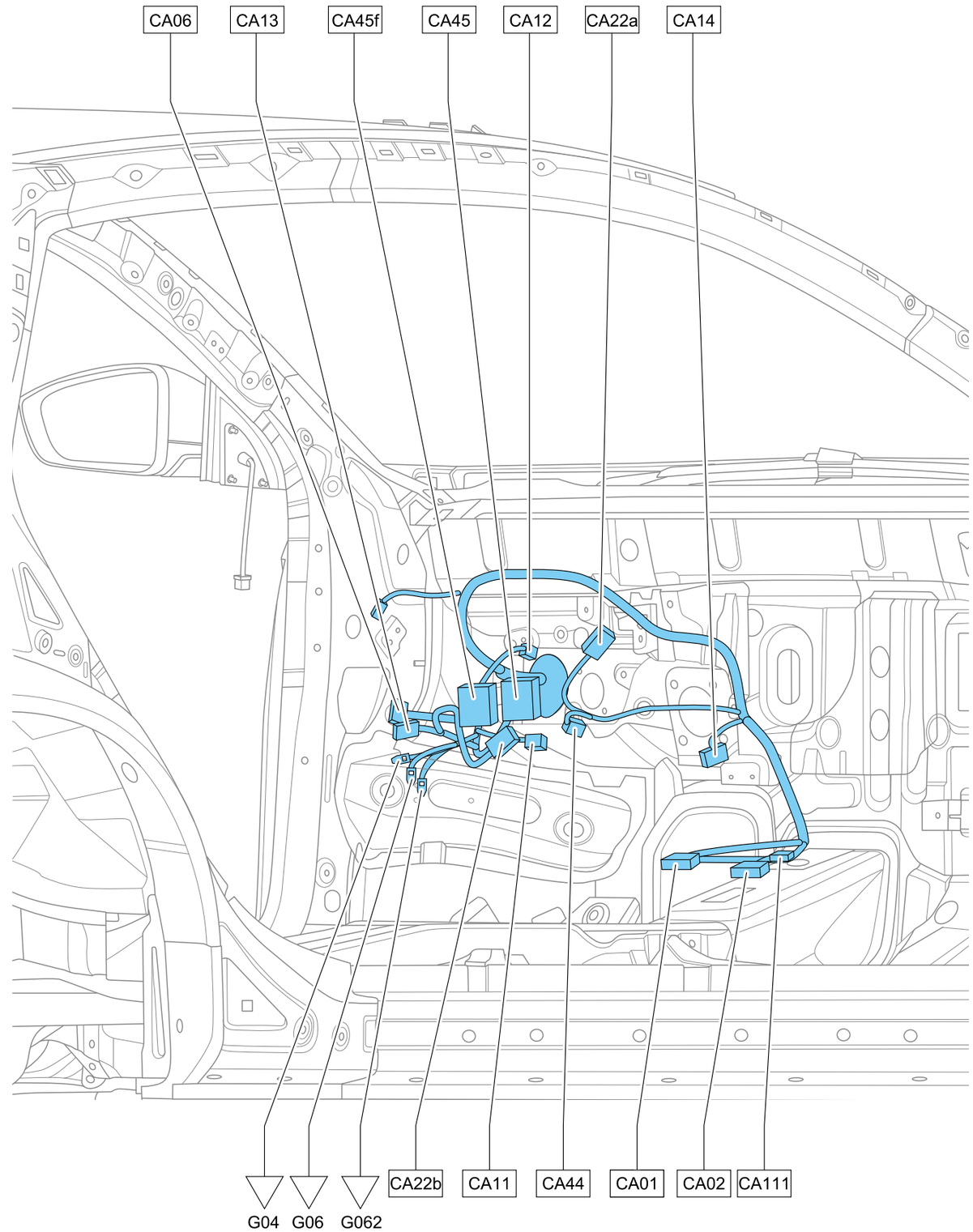

*1: Type I
*2: Type II

Front engine compartment harness connector list

Harness connector	Name	Harness connector	Name
CA01	Engine compartment harness to instrument panel harness connector	CA38	Window washer motor harness connector
CA02	Engine compartment harness to instrument panel harness connector	CA40	Right front wheel speed sensor harness connector
CA06	Engine compartment harness to floor harness connector	CA41	Right headlamp harness connector
CA09	Engine compartment harness to engine harness connector	CA43	A/C pressure switch harness connector
CA09a	Engine compartment harness to engine harness connector	CA44	Brake lamp switch harness connector
CA11	Clutch bottom switch harness connector	CA45	TCU harness connector (models with CVT)
CA12	Clutch top switch harness connector	CA45f	TCU harness connector (models with 6AT)
CA13	Engine compartment harness to central junction box harness connector	CA47	Ambient temperature sensor harness connector
CA14	Accelerator pedal sensor harness connector	CA48	Engine hood contact switch harness connector
CA15a	Downstream oxygen sensor harness connector (models with JLC-4G15B)	CA83	Gasoline particulate filter pressure sensor harness connector
CA15b	Downstream oxygen sensor harness connector (models with JLF-3G10T)	CA91	360 degree panoramic right camera harness connector
CA16	Vacuum sensor harness connector	CA93	Left front fog lamp harness connector
CA17	Brake fluid level sensor harness connector	CA97	Right front fog lamp harness connector
CA18	Wiper motor harness connector	CA111	Engine compartment harness to instrument panel harness connector
CA19	ABS module harness connector (ABS/ ESC without EPB/ABS with EPB)	CA120	Battery monitoring sensor harness connector
CA20	ESC module harness connector (ESC +EPB)	CA140a	Upstream oxygen sensor harness connector (models with JLC-4G15B)
CA21	Engine control module harness connector	CA140b	Upstream oxygen sensor harness connector (models with JLF-3G10T)
CA21d	Engine control module harness connector	CA197a	Gear Selector harness connector
CA22a	Electric power steering motor harness connector (models with brushless EPS)	CA180	Front windshield heating harness connector
CA22b	Electric power steering motor harness connector (models with brushed EPS)	CA205	Cylinder penetrating sensor harness connector (Type I)
CA23	Left front wheel speed sensor harness connector	CA205a	Cylinder penetrating sensor harness connector (Type II)
CA24	Left headlamp harness connector	CA206	Engine compartment harness to transmission harness connector

Harness connector	Name	Harness connector	Name
CA29	Electric vacuum pump harness connector	CA266	Washer nozzle heating harness connector (left)
CA30	Cooling fan harness connector	CA267	Washer nozzle heating harness connector (right)
CA33	Tweeter harness connector	CA301	Engine compartment harness to washer nozzle heating harness connector
CA34	Woofer harness connector	CA302	Washer nozzle heating harness to engine compartment harness connector

Front Engine Compartment Harness Terminal Definition

CA01 Engine compartment harness to instrument panel harness connector

CA02 Engine compartment harness to instrument panel harness connector

CA06 Engine compartment harness to floor harness connector

CA09 Engine compartment harness to engine harness connector

CA09a Engine compartment harness to engine harness connector

CA11 Clutch bottom switch harness connector

Pin	Functions	Note
1	Clutch bottom switch "normally closed" signal	-
2	Grounding	-
3	Clutch bottom switch signal	-
4	Grounding	-

CA12 Clutch top switch harness connector

Pin	Functions	Note
1	Clutch initial position signal	-
2	Grounding	-
3	-	-
4	-	-

CA13 Engine compartment harness to central junction box harness connector

Pin	Functions	Note
1	B+ power supply	-
2	B+ power supply	-

CA14 Accelerator pedal sensor harness connector

Pin	Functions	Note
1	Power supply 2	-
2	Power supply 1	-
3	Sensor ground 1	-
4	Pedal signal output 1	-
5	Sensor ground 2	-
6	Pedal signal output 2	-

CA15a Downstream oxygen sensor harness connector (models with JLC-4G15B)

Pin	Functions	Note
1	Heater power supply	-
2	Sensor ground	-
3	Heater grounding	-
4	Signal	-

CA15b Downstream oxygen sensor harness connector (models with JLF-3G10T)

Pin	Functions	Note
1	Heater power supply	-
2	Sensor ground	-
3	Heater grounding	-
4	Sensor signal	-

CA16 Vacuum sensor harness connector

Pin	Functions	Note
1	Sensor signal	-
2	Sensor ground	-
3	Power supply of sensor	-

CA17 Brake fluid level sensor harness connector

Pin	Functions	Note
1	Signal	-
2	Grounding	-

CA18 Wiper motor harness connector

Pin	Functions	Note
1	High gear	-
2	Low Gear	-
3	Reset	-
4	Grounding	-

CA19 ABS module harness connector (ABS/ESC without EPB/ABS with EPB)

Pin	Functions	Note
1	B+ power supply	-
2	-	-
3	-	-
4	Right front wheel speed sensor negative	-
5	-	-
6	-	-
7	-	-

Pin	Functions	Note
8	Left front wheel speed sensor negative	-
9	ESC OFF switch signal	-
10	-	-
11	-	-
12	Auto Hold indicator switch signal	-
13	Grounding	-
14	CS CAN-L	Models with PEPS
14	PT CAN-L	Models without PEPS
15	-	-
16	Right front wheel speed sensor positive	-
17	Right rear wheel speed sensor positive	-
18	Left rear wheel speed sensor negative	-
19	Left front wheel speed sensor positive	-
20	-	-
21	-	-
22	-	-
23	Speed signal	-
24	-	-
25	B+ power supply	-
26	CS CAN-H	Models with PEPS
26	PT CAN-H	Models without PEPS
27	Automatic parking indicator signal	-
28	Ignition power supply 1	-
29	Right rear wheel speed sensor negative	-
30	Brake lamp switch signal	-
31	Left rear wheel speed sensor positive	-
32	-	-
33	-	-
34	ESC OFF indicator	-
35	-	-

Pin	Functions	Note
36	-	-
37	-	-
38	Grounding	-

CA20 ESC module harness connector (ESC+EPB)

Pin	Functions	Note
1	B+ power supply	-
2	Right rear brake caliper motor positive	-
3	Right rear brake caliper motor negative	-
4	-	-
5	CS CAN-H	-
6	-	-
7	Left front wheel speed sensor negative	-
8	Automatic parking indicator signal	-
9	-	-
10	-	-
11	-	-
12	Left rear brake caliper motor negative	-
13	Left rear brake caliper motor positive	-
14	Grounding	-
15	Electronic parking brake release signal output	-
16	Electronic parking brake release signal input	-
17	-	-
18	-	-
19	CS CAN-L	-
20	-	-
21	Right front wheel speed sensor positive	-
22	Right rear wheel speed sensor positive	-
23	Left rear wheel speed sensor negative	-
24	Left front wheel speed sensor positive	-
25	-	-
26	Right front wheel speed sensor negative	-
27	-	-
28	-	-

Pin	Functions	Note
29	-	-
30	B+ power supply	-
31	Electronic parking brake application signal output	-
32	Electronic parking brake application signal input	-
33	-	-
34	-	-
35	-	-
36	Ignition power supply 1	-
37	Right rear wheel speed sensor negative	-
38	Brake lamp switch signal	-
39	Left rear wheel speed sensor positive	-
40	-	-
41	Auto Hold indicator switch signal	-
42	-	-
43	-	-
44	-	-
45	-	-
46	Grounding	-

CA21 Engine control module harness connector

Pin	Functions	Note
A1	Exhaust gas control valve negative	-
A2	Control valve for exhaust gas positive	-
A3	-	-
A4	-	-
A5	Grounding	-
B1	Grounding	-
B2	Upstream oxygen sensor power supply	-
B3	Upstream oxygen sensor ground	-
B4	-	-
B5	Grounding	-
C1	Brake signal	-
C2	Brake lamp signal	-
C3	Downstream oxygen sensor ground	-
C4	-	-
C5	Adjustment resistance of the upstream oxygen sensor	-

Pin	Functions	Note
D1	-	-
D2	Electronic accelerator pedal sensor ground 1	-
D3	-	-
D4	-	-
D5	PT CAN-H	-
E1	Starting feedback signal	-
E2	Electronic accelerator pedal sensor ground 2	-
E3	Brake vacuum sensor/Fuel pressure sensor grounding	JLC-4G15B
E3	Fuel pressure sensor grounding	JLF-3G10T
E4	-	-
E5	PT CAN-L	-
F1	-	-
F2	Fuel pressure sensor signal	-
F3	Accelerator pedal sensor signal output 1	-
F4	-	-
F5	Upstream oxygen sensor signal	-
G1	Headlamp switch signal	-
G2	-	-
G3	Accelerator pedal sensor signal output 2	-
G4	-	-
G5	-	-
H1	LIN	-
H2	Engine anti-theft system	-
H3	-	-
H4	-	-
H5	-	-
J1	Vacuum pump relay control	-
J2	Fuel pump relay control	-
J3	-	-
J4	-	-
J5	Start relay 1 control	-
K1	A/C compressor relay control	-
K2	-	-
K3	-	-
K4	-	-

Pin	Functions	Note
K5	-	-
L1	-	-
L2	Ignition power supply 1	-
L3	5V power supply 1 of the accelerator pedal	-
L4	Brake vacuum sensor/Fuel pressure sensor power supply	-
L5	High-speed fan relay control	-
M1	-	-
M2	Main relay control	-
M3	5V power supply 2 of the accelerator pedal	-
M4	Vacuum sensor signal	-
M5	B+ power supply	-
N1	Downstream oxygen sensor signal	-
N2	Main relay power supply	-
N3	Main relay power supply	-
N4	Grounding	-
N5	Downstream oxygen sensor heating grounding	-

CA21d Engine control module harness connector

Pin	Functions	Note
1	Start relay 1 control	-
2	Low-speed fan relay control	-
3	-	-
4	-	-
5	Electronic coolant pump control signal	-
6	Main relay control	-
7	-	-
8	Downstream oxygen sensor signal	-
9	Brake vacuum sensor ground	-
10	-	-
11	-	-
12	-	-
13	Accelerator pedal sensor 1 ground	-
14	Brake vacuum sensor power supply	-
15	Accelerator pedal sensor 1 power supply	-
16	Accelerator pedal sensor 2 power supply	-
17	-	-
18	-	-
19	-	-
20	-	-
21	Brake vacuum pump relay control	-
22	A/C variable capacity valve adjustment negative	-
23	-	-
24	A/C compressor relay control	-
25	-	-
26	Fuel pump relay control	-
27	Brake vacuum sensor signal	-
28	Downstream oxygen sensor ground	-
29	Accelerator pedal sensor 2 power supply	-
30	-	-
31	Accelerator pedal sensor signal output 1	-
32	-	-
33	-	-
34	-	-
35	-	-
36	-	-
37	-	-
38	-	-
39	High-speed fan relay control	-
40	Exhaust oil control valve negative	-
41	Intake oil control valve negative	-
42	Carbon canister solenoid valve negative	-
43	-	-
44	-	-
45	-	-
46	Ignition power supply 1	-
47	-	-
48	Upstream oxygen sensor power supply	-
49	Upstream oxygen sensor ground	-

Pin	Functions	Note
50	LIN (Battery sensor & smart alternator & electronic coolant pump)	-
51	Accelerator pedal sensor signal output 2	-
52	-	-
53	-	-
54	-	-
55	Brake switch "ON" signal	-
56	Brake switch "OFF" signal	-
57	Starter status feedback signal	-
58	Carbon canister shut-off valve negative	-
59	Oil pump signal	-
60	-	-
61	Downstream oxygen sensor heating grounding	-
62	Upstream oxygen sensor heating grounding	-
63	Uninterruptible power system (UPS)	-
64	PT CAN-L	-
65	PT CAN-H	-
66	Adjustment resistance of the upstream oxygen sensor	-
67	Upstream oxygen sensor signal	-
68	-	-
69	-	-
70	-	-
71	-	-
72	-	-
73	Clutch initial position signal	-
74	Startup signal	-
75	-	-
76	-	-
77	-	-
78	-	-
79	-	-
80	-	-
81	-	-
82	-	-
83	-	-
84	-	-

Pin	Functions	Note
85	-	-
86	-	-
87	-	-
88	-	-
89	-	-
90	-	-
91	-	-
92	-	-
93	-	-
94	-	-
95	-	-
96	Grounding	-
97	Grounding	-
98	Grounding	-
99	Grounding	-
100	Main relay power supply	-
101	Main relay power supply	-
102	Main relay power supply	-
103	Main relay power supply	-

CA22a Electric power steering motor harness connector (models with brushless EPS)

Pin	Functions	Note
1	B+ power supply	-
2	Grounding	-

CA22b Electric power steering motor harness connector (models with brushed EPS)

Pin	Functions	Note
1	B+ power supply	-
2	Grounding	-

CA23 Left front wheel speed sensor harness connector

Pin	Functions	Note
1	Sensor positive	-
2	Sensor negative	-

CA24 Left headlamp harness connector

Pin	Functions	Note
1	Turn lamp effect signal	-
2	Headlamp height adjustment power supply	-

Pin	Functions	Note
3	Headlamp height adjustment signal	-
4	Headlamp height adjustment grounding	-
5	High beam lamps grounding	-
6	Low beam lamps power supply	-
7	High beam lamps power supply	-
8	Low beam lamps grounding	-
9	Position lamp/Daytime running lamp/ Turn signals grounding	-
10	Daytime running lamps power supply	-
11	Position lamp power supply	-
12	Turn signal lamp power supply	-
13	-	-
14	Turn signal lamp fault feedback signal	-

CA29 Electric vacuum pump harness connector

Pin	Functions	Note
1	Power supply	-
2	Grounding	-

CA30 Cooling fan harness connector

Pin	Functions	Note
1	Low Gear	-
2	High gear	-
3	Grounding	-

CA33 Tweeter harness connector

Pin	Functions	Note
1	Grounding	-
2	Power supply	-

CA34 Woofer harness connector

Pin	Functions	Note
1	Grounding	-
2	Power supply	-

CA38 Window washer motor harness connector

Pin	Functions	Note
1	Grounding	-
2	Power supply	-
3	-	-

CA40 Right front wheel speed sensor harness connector

Pin	Functions	Note
1	Sensor positive	-
2	Sensor negative	-

CA41 Right headlamp harness connector

Pin	Functions	Note
1	Turn lamp effect signal	-
2	Headlamp height adjustment power supply	-
3	Headlamp height adjustment signal	-
4	Headlamp height adjustment grounding	-
5	High beam lamps grounding	-
6	Low beam lamps power supply	-
7	High beam lamps power supply	-
8	Low beam lamps grounding	-
9	Position lamp/Daytime running lamp/ Turn signals grounding	-
10	Daytime running lamps power supply	-
11	Position lamp power supply	-
12	Turn signal lamp power supply	-
13	-	-
14	Turn signal lamp fault feedback signal	-

CA43 A/C pressure switch harness connector

Pin	Functions	Note
1	A/C request signal	-
2	A/C middle-pressure switch signal	-
3	Grounding	-
4	A/C request signal	Models with JLC-4G15B or JLF-3G10T
4	A/C high/low-pressure switch signal	Models with BHE15-AFD

CA44 Brake lamp switch harness connector

Pin	Functions	Note
1	Brake switch "ON" signal	-
2	Brake switch "OFF" signal	-
3	B+ power supply	-
4	Main relay power supply	-

CA45 TCU harness connector (models with CVT)

Pin	Functions	Note
A1	-	-
A2	-	-
A3	Input pulley shaft pressure control valve grounding	-
A4	-	-
B1	-	-
B2	P-gear lock-up control valve negative	-
B3	-	-
B4	Clutch control valve grounding	-
C1	-	-
C2	Output pulley shaft oil pressure/ temperature sensor grounding	-
C3	-	-
C4	Output pulley shaft pressure control valve grounding	-
D1	-	-
D2	Gear sensor/Input pulley shaft oil pressure sensor grounding	-
D3	Hydraulic torque converter control valve grounding	-
D4	Main oil pressure control valve grounding	-
E1	Transmission oil temperature sensor signal	-
E2	-	-
E3	-	-
E4	-	-
F1	Output pulley shaft oil pressure sensor signal	-
F2	Input pulley shaft oil pressure sensor signal	-
F3	-	-
F4	-	-
G1	PT CAN-L	-
G2	-	-

Pin	Functions	Note
G3	Gear signal 1	-
G4	-	-
H1	PT CAN-H	-
H2	-	-
H3	-	-
H4	Gear signal 2	-
J1	-	-
J2	Upshifting signal	-
J3	Turbine speed sensor signal	-
J4	Output pulley shaft/Turbine speed sensor grounding	-
K1	-	-
K2	Output pulley shaft speed sensor signal	-
K3	-	-
K4	Input pulley shaft speed sensor signal	-
L1	-	-
L2	Downshifting signal	-
L3	-	-
L4	Manual mode	-
M1	-	-
M2	-	-
M3	Input pulley shaft speed sensor ground	-
M4	-	-
N1	-	-
N2	Gear sensor/Input pulley shaft oil pressure sensor power supply	-
N3	-	-
N4	Turbine speed sensor power supply	-
O1	-	-
O2	Output pulley shaft oil pressure sensor power supply	-
O3	Output pulley shaft speed sensor power supply	-
O4	Input pulley shaft speed sensor power supply	-
P1	Master oil pressure/P-gear lock-up control valve power supply	-
P2	Ignition power supply 1	-
P3	B+ power supply	-

Pin	Functions	Note
P4	Grounding	-
Q1	Input/output pulley shaft pressure control valve power supply	-
Q2	Hydraulic torque converter/Clutch control valve power supply	-
Q3	B+ power supply	-
Q4	Grounding	-

CA45f TCU harness connector (models with 6AT)

Pin	Functions	Note
1	Grounding 1	-
2	Grounding 2	-
3	Grounding 3	-
4	B+ power supply 1	-
5	B+ power supply 2	-
6	Ignition power supply 1	-
7	Input speed sensor power supply	-
8	-	-
9	Input speed sensor signal	-
10	-	-
11	Gear selector gear signal 1	-
12	-	-
13	-	-
14	-	-
15	-	-
16	-	-
17	PT CAN-L	-
18	PT CAN-H	-
19	SLC2 solenoid valve	-
20	SLB1 solenoid valve	-
21	SLC1 solenoid valve power supply	-
22	SLC2 solenoid valve power supply	-
23	ON/OFF1 solenoid valve power supply	-
24	-	-
25	-	-
26	Gear selector 5V power supply	-
27	-	-
28	Output speed sensor signal	-
29	-	-
30	Gear selector gear signal 2	-

Pin	Functions	Note
31	-	-
32	-	-
33	-	-
34	-	-
35	-	-
36	Upshifting signal	-
37	Downshifting signal	-
38	SLU solenoid valve	-
39	SLT solenoid valve	-
40	-	-
41	-	-
42	Output speed sensor power supply	-
43	-	-
44	ON/OFF1 solenoid valve	-
45	-	-
46	Solenoid valve control signal	-
47	-	-
48	-	-
49	-	-
50	-	-
51	-	-
52	-	-
53	-	-
54	-	-
55	-	-
56	-	-
57	SLC1 solenoid valve	-
58	SLC3 solenoid valve	-
59	SLC3 solenoid valve power supply	-
60	SLU solenoid valve power supply	-
61	ON/OFF2 solenoid valve power supply	-
62	-	-
63	ON/OFF2 solenoid valve	-
64	-	-
65	-	-
66	-	-
67	-	-
68	-	-
69	-	-
70	-	-
71	-	-

Pin	Functions	Note
72	Transmission oil temperature sensor	-
73	Transmission oil temperature sensor grounding	-
74	-	-
75	Gear selector grounding	-
76	-	-
77	-	-
78	-	-
79	SLT solenoid valve power supply	-
80	SLB1 solenoid valve power supply	-
81	-	-

CA47 Ambient temperature sensor harness connector

Pin	Functions	Note
1	Signal	-
2	Sensor ground	-

CA48 Engine hood contact switch harness connector

Pin	Functions	Note
1	Engine hood switch status signal	-
2	Grounding	-

CA83 Gasoline particulate filter pressure sensor harness connector

Pin	Functions	Note
1	Sensor signal	-
2	Sensor ground	-
3	5V power supply of sensor	-

CA91 360 degree panoramic front camera harness connector

Pin	Functions	Note
1	360 degree panoramic front camera signal	-
1S	360 degree panoramic front camera grounding	-

CA93 Left front fog lamp harness connector

Pin	Functions	Note
1	Power supply	-
2	Grounding	-

CA97 Right front fog lamp harness connector

Pin	Functions	Note
1	Power supply	-
2	Grounding	-

CA111 Engine compartment harness to instrument panel harness connector

CA120 Battery monitoring sensor harness connector

Pin	Functions	Note
1	LIN	-
2	B+ power supply	-

CA140a Upstream oxygen sensor harness connector (models with JLC-4G15B)

Pin	Functions	Note
1	Signal	-
2	Sensor ground	-
3	Heating signal	-
4	Heater power supply	-
5	Adjustment resistance of the upstream oxygen sensor	-
6	Power supply of sensor	-

CA140b Upstream oxygen sensor harness connector (models with JLF-3G10T)

Pin	Functions	Note
1	Signal	-
2	Sensor ground	-
3	Heating signal	-
4	Heater power supply	-
5	Adjustment resistance of the upstream oxygen sensor	-
6	Power supply of sensor	-

CA180 front windshield heating harness connector

Pin	Functions	Note
1	Grounding	-
2	Power supply	-

CA197a Gear selector harness connector

Pin	Functions	Note
1	5V power supply	-
2	Grounding	-

Pin	Functions	Note
3	Gear signal 1	-
4	Gear signal 2	-

CA205 Cylinder penetrating sensor harness connector (Type I)

Pin	Functions	Note
1	SLB1 solenoid valve	-
2	SLC3 solenoid valve	-
3	SLC3 solenoid valve power supply	-
4	SLU solenoid valve power supply	-
5	SLU solenoid valve	-
6	SLC1 solenoid valve power supply	-
7	SLC1 solenoid valve	-
8	SLB1 solenoid valve power supply	-
9	Output speed sensor power supply	-
10	Transmission oil temperature sensor	-
11	SLC2 solenoid valve power supply	-
12	SLC2 solenoid valve	-
13	SLT solenoid valve power supply	-
14	SLT solenoid valve	-
15	ON/OFF1 solenoid valve power supply	-
16	-	-
17	-	-
18	Output speed sensor signal	-
19	Transmission oil temperature sensor grounding	-
20	Input speed sensor signal	-
21	Input speed sensor power supply	-
22	-	-
23	-	-
24	ON/OFF1 solenoid valve	-
25	ON/OFF2 solenoid valve	-
26	ON/OFF2 solenoid valve power supply	-
27	-	-
28	-	-
29	-	-
30	-	-
31	-	-
32	-	-
33	-	-

CA205a Cylinder penetrating sensor harness connector (Type II)

Pin	Functions	Note
1	Transmission oil temperature sensor	-
2	Transmission oil temperature sensor grounding	-
3	SLC1 solenoid valve	-
4	SLC1 solenoid valve power supply	-
5	ON/OFF1 solenoid valve	-
6	ON/OFF1 solenoid valve power supply	-
7	Output speed sensor signal	-
8	Output speed sensor power supply	-
9	SLB1 solenoid valve	-
10	SLB1 solenoid valve power supply	-
11	SLU solenoid valve	-
12	SLU solenoid valve power supply	-
13	ON/OFF2 solenoid valve	-
14	ON/OFF2 solenoid valve power supply	-
15	SLC2 solenoid valve	-
16	SLC2 solenoid valve power supply	-
17	SLC3 solenoid valve	-
18	SLC3 solenoid valve power supply	-
19	Input speed sensor signal	-
20	Input speed sensor power supply	-
21	SLT solenoid valve	-
22	SLT solenoid valve power supply	-
23	Gear selector 5V power supply	-
24	Gear selector grounding	-
25	Gear selector gear signal 1	-
26	Gear selector gear signal 2	-

CA206 Engine compartment harness to transmission harness connector

CA266 Washer nozzle heating harness connector (left)

Pin	Functions	Note
1	Grounding	-
2	Power supply	-

CA267 Washer nozzle heating harness connector (right)

Pin	Functions	Note
1	Grounding	-
2	Power supply	-

CA301 Engine compartment harness to washer nozzle heating harness connector

CA302 Washer nozzle heating harness to engine compartment harness connector

G01 Engine compartment harness grounding

G04 Engine compartment harness grounding

G06 Engine compartment harness grounding

G062 Engine compartment harness grounding

G10 Engine compartment harness grounding

G11A Engine compartment harness grounding

G11B Engine compartment harness grounding

G15 Engine compartment harness grounding

G16 Engine compartment harness grounding

G17 Engine compartment harness grounding

G17A Engine compartment harness grounding

G18 Engine compartment harness grounding

Transmission harness layout drawing

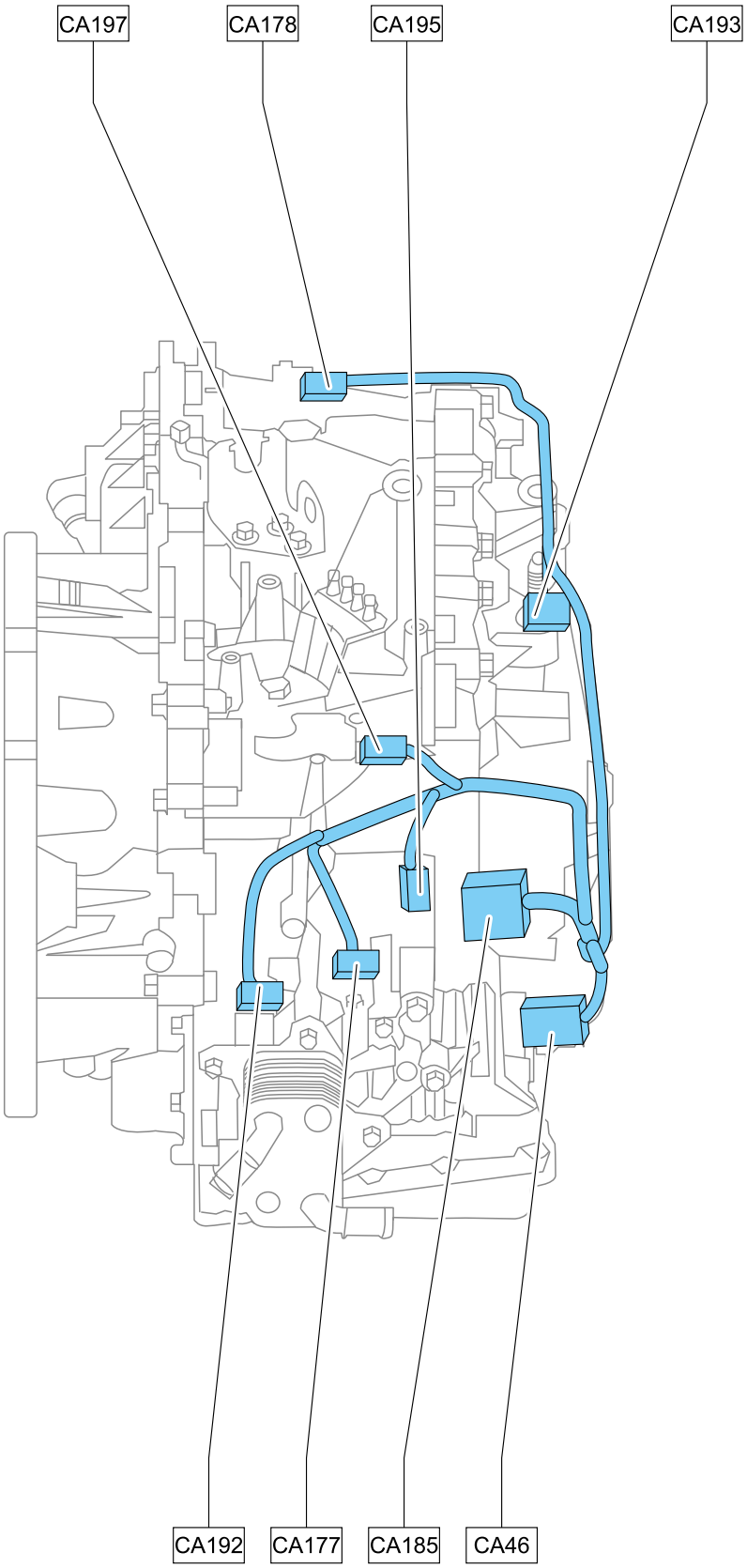

Transmission harness connector list

Harness connector	Name	Harness connector	Name
CA46	Automatic transmission valve harness connector	CA192	Output shaft speed sensor harness connector
CA177	Input shaft speed sensor harness connector	CA193	output shaft transmission oil pressure sensor harness connector
CA178	Input shaft speed sensor harness connector	CA195	Input shaft transmission oil pressure sensor harness connector
CA185	Transmission harness to engine compartment harness connector	CA197	Gear Selector harness connector

Transmission Harness Terminal Definition

CA46 Automatic transmission valve harness connector

Pin	Functions	Note
1	-	-
2	-	-
3	-	-
4	-	-
5	-	-
6	-	-
7	Transmission oil temperature sensor signal	-
8	Transmission oil temperature sensor ground	-
9	Input pulley shaft pressure control valve power supply	-
10	Input pulley shaft pressure control valve grounding	-
11	Hydraulic torque converter control valve power supply	-
12	Hydraulic torque converter control valve grounding	-
13	Main oil pressure control valve power supply	-
14	Main oil pressure control valve grounding	-
15	Clutch control valve power supply	-
16	Clutch control valve grounding	-
17	Output pulley shaft pressure control valve power supply	-
18	Output pulley shaft pressure control valve grounding	-
19	-	-
20	-	-
21	-	-
22	-	-
23	-	-
24	-	-

CA177 Input shaft speed sensor harness connector

Pin	Functions	Note
1	Power supply	-
2	Signal	-
3	Grounding	-

CA178 Input shaft speed sensor harness connector

Pin	Functions	Note
1	Power supply	-
2	Signal	-
3	Grounding	-

CA185 Transmission harness to engine compartment harness connector

CA192 Output shaft speed sensor harness connector

Pin	Functions	Note
1	Power supply	-
2	Signal	-
3	Grounding	-

CA193 Output shaft transmission oil pressure sensor harness connector

Pin	Functions	Note
1	Grounding	-
2	Signal	-
3	Power supply	-

CA195 Input shaft transmission oil pressure sensor harness connector

Pin	Functions	Note
1	Grounding	-
2	Signal	-
3	Power supply	-

CA197 Gear selector harness connector

Pin	Functions	Note
1	Power supply	-
2	Gear signal 1	-
3	Grounding	-
4	Gear signal 2	-

Engine harness layout drawing (JLC-4G15B)

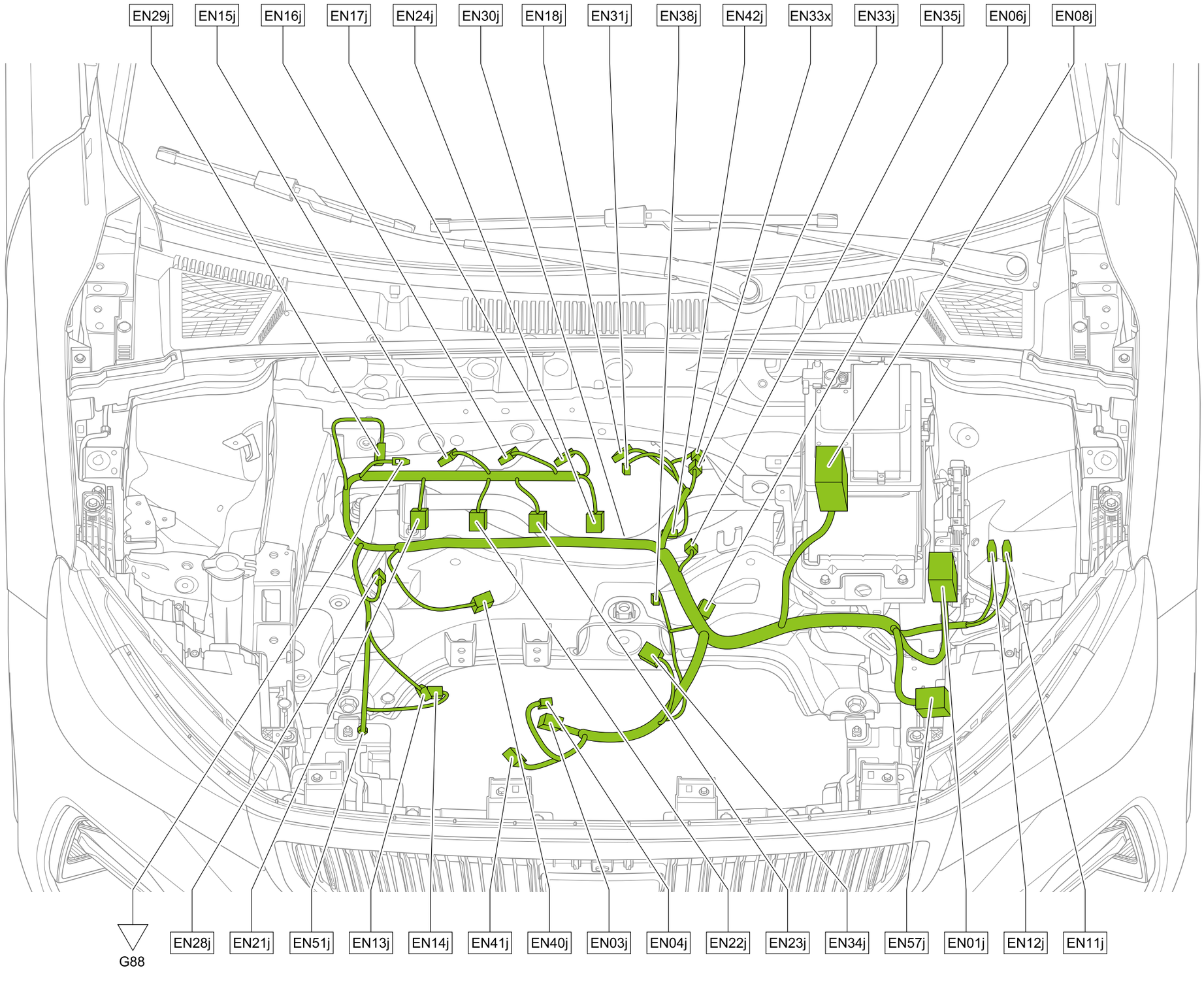

Engine Harness Connector List (JLC-4G15B)

Harness connector	Name	Harness connector	Name
EN01j	Engine control module harness connector	EN24j	4th cylinder fuel injector harness connector
EN03j	Starter power harness connector	EN28j	Intake oil control valve harness connector
EN04j	Starter relay harness connector	EN29j	Exhaust oil control valve harness connector
EN06j	Reverse lamp switch harness connector	EN30j	Intake camshaft position sensor harness connector
EN08j	Battery positive harness connector	EN31j	Exhaust camshaft position sensor harness connector
EN11j	Battery to engine compartment junction box harness connector	EN33j	Carbon canister solenoid valve harness connector (models meeting Euro VI Vehicle Emission Standards)
EN12j	Alternator to engine compartment junction box harness connector	EN33x	Carbon canister solenoid valve harness connector (models meeting China's Stage VI Vehicle Emission Standards)
EN13j	Alternator power supply harness connector	EN34j	Intake air pressure and air temperature sensor harness connector
EN14j	Alternator signal harness connector	EN35j	Electronic throttle valve harness connector
EN15j	1st cylinder ignition coil harness connector	EN38j	Crankshaft position sensor harness connector
EN16j	2nd cylinder ignition coil harness connector	EN40j	Knock sensor harness connector
EN17j	3rd cylinder ignition coil harness connector	EN41j	Oil pressure sensor harness connector
EN18j	4th cylinder ignition coil harness connector	EN42j	Engine coolant temperature sensor harness connector
EN21j	1st cylinder fuel injector harness connector	EN51j	Compressor power harness connector
EN22j	2nd cylinder fuel injector harness connector	EN57j	Engine harness to engine compartment harness connector
EN23j	3rd cylinder fuel injector harness connector	-	-

Engine Harness Terminal Definition (JLC-4G15B)

EN01j Engine control module harness connector

Pin	Functions	Note
A1	-	-
A2	-	-
A3	Carbon canister solenoid valve negative	-
A4	3rd cylinder ignition signal	-
A5	2nd cylinder ignition signal	-
B1	-	-
B2	-	-
B3	VVT solenoid valve negative at intake side	-
B4	1st cylinder ignition signal	-
B5	4th cylinder ignition signal	-
C1	Low-speed fan relay control	-
C2	-	-
C3	1st cylinder fuel injector	-
C4	3rd cylinder fuel injector	-
C5	-	-
D1	VVT solenoid valve negative at exhaust side	-
D2	-	-
D3	2nd cylinder fuel injector	-
D4	4th cylinder fuel injector	-
D5	Electronic throttle 5V power supply	-
E1	-	-
E2	-	-
E3	Clutch initial position signal	-
E4	-	-
E5	5V power supply of gasoline particulate filter pressure sensor	-
F1	Carbon canister shut-off valve negative	-
F2	-	-
F3	Gasoline particulate filter sensor signal	-
F4	-	-
F5	Electronic throttle valve position signal 1	-

Pin	Functions	Note
G1	Intake camshaft position sensor / exhaust camshaft position sensor / intake air pressure and air temperature sensor grounding	-
G2	-	-
G3	Engine rotation sensor 5V power supply	-
G4	Engine rotation sensor signal	-
G5	Intake air pressure and air temperature sensor / engine coolant temperature sensor grounding	-
H1	-	-
H2	-	-
H3	-	-
H4	Exhaust camshaft position sensor signal	-
H5	GPF pressure sensor grounding	-
J1	-	-
J2	-	-
J3	Electronic throttle valve position signal 2	-
J4	Knock sensor positive	-
J5	Headlamp switch signal	-
K1	-	-
K2	Startup signal	-
K3	Electronic throttle valve sensor grounding	-
K4	Knock sensor negative	-
K5	Clutch bottom switch "normally closed" signal	-
L1	-	-
L2	-	-
L3	Intake air pressure and air temperature sensor signal	-
L4	A/C medium voltage signal	-
L5	-	-
M1	Intake air temperature sensor signal	-
M2	A/C request signal	-
M3	Intake CMP sensor signal	-
M4	Camshaft position sensor grounding	-
M5	Engine rotation sensor grounding	-

Pin	Functions	Note
N1	Upstream oxygen sensor heating signal	-
N2	-	-
N3	Coolant temperature sensor positive	-
N4	Electronic throttle valve motor control positive	-
N5	Electronic throttle valve motor control negative	-

EN03j Starter power harness connector

Pin	Functions	Note
1	B+ power supply	-

EN04j Starter relay harness connector

Pin	Functions	Note
1	Excitation control signal	-

EN06j Reverse lamp switch harness connector

Pin	Functions	Note
1	Grounding	-
2	Reverse lamp switch signal	-

EN08j Battery positive harness connector

Pin	Functions	Note
1	B+ power supply	-

EN11j Battery to engine compartment junction box harness connector

Pin	Functions	Note
1	B+ power supply	-

EN12j Alternator to front engine compartment distribution box harness connector

Pin	Functions	Note
1	ALT power supply	-

EN13j Alternator power supply harness connector

Pin	Functions	Note
1	ALT power supply	-

EN14j Alternator signal harness connector

Pin	Functions	Note
1	LIN	-
2	-	-
3	-	-

EN15j 1st cylinder ignition coil harness connector

Pin	Functions	Note
1	Signal	-
2	Power supply	-
3	Grounding	-

EN16j 2nd cylinder ignition coil harness connector

Pin	Functions	Note
1	Signal	-
2	Power supply	-
3	Grounding	-

EN17j 3rd cylinder ignition coil harness connector

Pin	Functions	Note
1	Signal	-
2	Power supply	-
3	Grounding	-

EN18j 4th cylinder ignition coil harness connector

Pin	Functions	Note
1	Signal	-
2	Power supply	-
3	Grounding	-

EN21j 1st cylinder fuel injector harness connector

Pin	Functions	Note
1	Fuel injector positive	-
2	Fuel injector negative	-

EN22j 2nd cylinder fuel injector harness connector

Pin	Functions	Note
1	Fuel injector positive	-
2	Fuel injector negative	-

EN23j 3rd cylinder fuel injector harness connector

Pin	Functions	Note
1	Fuel injector positive	-
2	Fuel injector negative	-

EN24j 4th cylinder fuel injector harness connector

Pin	Functions	Note
1	Fuel injector positive	-
2	Fuel injector negative	-

EN28j Intake oil control valve harness connector

Pin	Functions	Note
1	Solenoid valve positive	-
2	Solenoid valve negative	-

EN29j Exhaust oil control valve harness connector

Pin	Functions	Note
1	Solenoid valve positive	-
2	Solenoid valve negative	-

EN30j Intake camshaft position sensor harness connector

Pin	Functions	Note
1	Power supply	-
2	Sensor ground	-
3	Signal	-

EN31j Exhaust camshaft position sensor harness connector

Pin	Functions	Note
1	Power supply	-
2	Sensor ground	-
3	Signal	-

EN33j Carbon canister solenoid valve harness connector (models meeting Euro VI Vehicle Emission Standards)

Pin	Functions	Note
1	Solenoid valve positive	-
2	Solenoid valve negative	-

EN33x Carbon canister solenoid valve harness connector (models meeting China's Stage VI Vehicle Emission Standards)

Pin	Functions	Note
1	Solenoid valve positive	-
2	Solenoid valve negative	-

EN34j Intake air pressure and air temperature sensor harness connector

Pin	Functions	Note
1	Sensor ground	-
2	Intake air temperature sensor signal	-
3	Power supply	-
4	Intake air pressure and air temperature sensor signal	-

EN35j Electronic throttle valve harness connector

Pin	Functions	Note
1	Electronic throttle valve position signal 1	-
2	Power supply	-
3	Motor control positive	-
4	Electronic throttle valve position signal 2	-
5	Motor control negative	-
6	Sensor ground	-

EN38j Crankshaft position sensor harness connector

Pin	Functions	Note
1	Power supply	-
2	Signal	-
3	Sensor ground	-

EN40j Knock sensor harness connector

Pin	Functions	Note
1	Sensor positive	-
2	Sensor negative	-

EN41j Oil pressure sensor harness connector

Pin	Functions	Note
1	Engine oil pressure signal	-

EN42j Engine coolant temperature sensor harness connector

Pin	Functions	Note
1	Sensor ground	-
2	-	-
3	Signal	-

EN51j Compressor power harness connector

Pin	Functions	Note
1	Power supply	-

EN57j Engine harness to engine compartment harness connector

G88 Engine harness grounding (JLC-4G15B)

Engine harness layout drawing (JLF-3G10T)

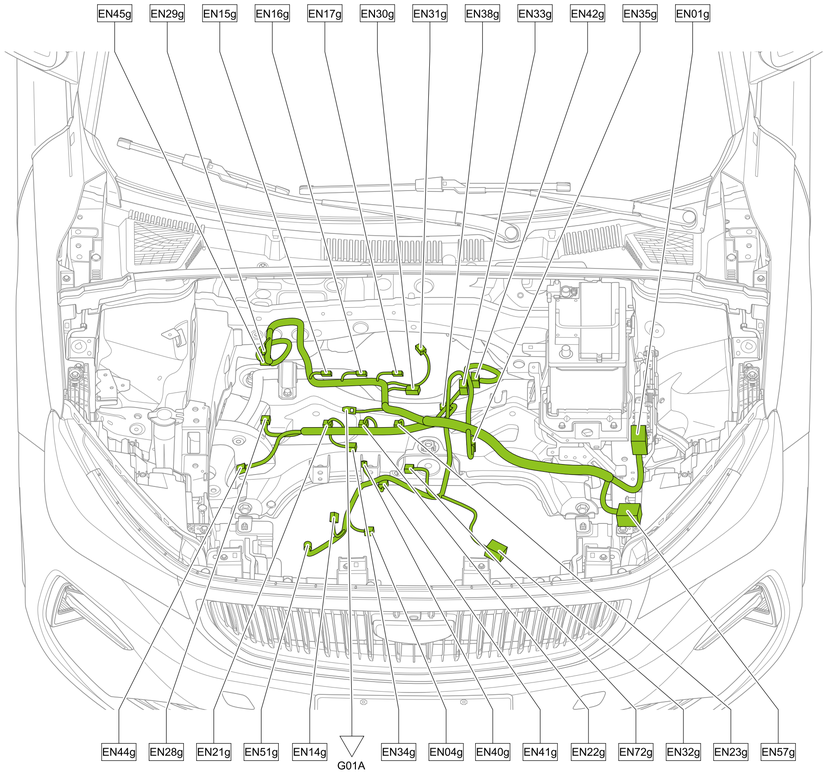

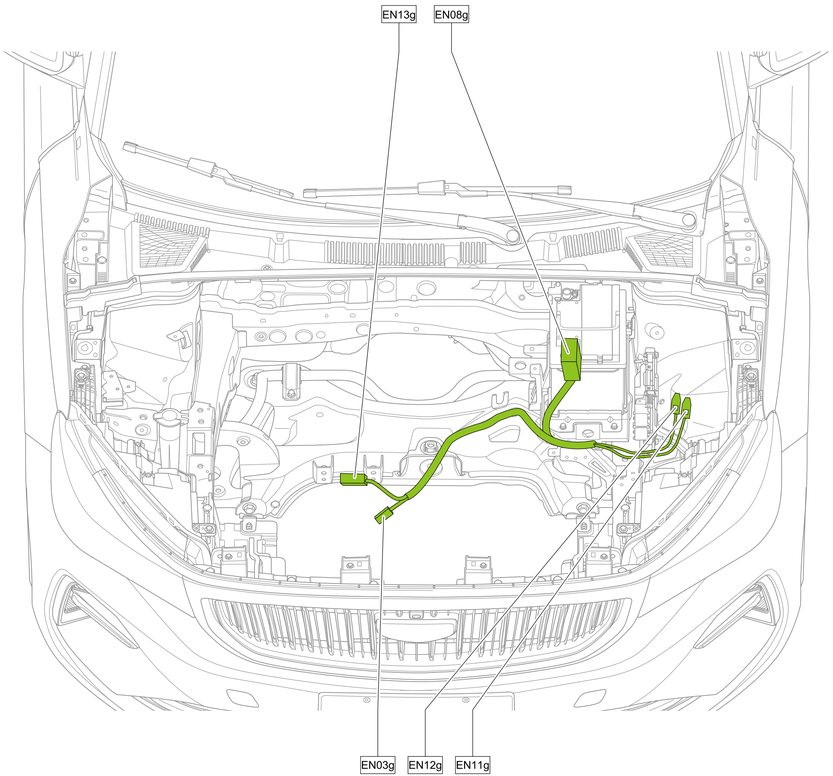

Engine Harness Connector List (JLF-3G10T)

Harness connector	Name	Harness connector	Name
EN01g	Engine control module harness connector	EN30g	Intake camshaft position sensor harness connector
EN03g	Starter power harness connector	EN31g	Exhaust camshaft position sensor harness connector
EN04g	Starter relay harness connector	EN32g	Boost air pressure and air temperature sensor harness connector
EN08g	Battery positive harness connector	EN33g	Carbon canister solenoid valve harness connector
EN11g	Battery to engine compartment junction box harness connector	EN34g	Intake air pressure and air temperature sensor harness connector
EN12g	Alternator to engine compartment junction box harness connector	EN35g	Electronic throttle valve harness connector
EN13g	Alternator power supply harness connector	EN38g	Crankshaft position sensor harness connector
EN14g	Alternator signal harness connector	EN40g	Knock sensor harness connector
EN15g	1st cylinder ignition coil harness connector	EN41g	Oil pressure sensor harness connector
EN16g	2nd cylinder ignition coil harness connector	EN42g	Engine coolant temperature sensor harness connector
EN17g	3rd cylinder ignition coil harness connector	EN44g	Intake pressure relief solenoid valve harness connector
EN21g	1st cylinder fuel injector harness connector	EN45g	EGR valve harness connector
EN22g	2nd cylinder fuel injector harness connector	EN51g	Compressor power harness connector
EN23g	3rd cylinder fuel injector harness connector	EN57g	Engine harness to engine compartment harness connector
EN28g	Intake oil control valve harness connector	EN72g	Venturi tube pressure sensor harness connector
EN29g	Exhaust oil control valve harness connector	-	-

Engine Harness Terminal Definition (JLF-3G10T)

EN01g Engine control module harness connector

Pin	Functions	Note
A1	-	-
A2	-	-
A3	Carbon canister solenoid valve negative	-
A4	2nd cylinder ignition signal	-
A5	-	-
B1	-	-
B2	-	-
B3	VVT solenoid valve negative at intake side	-
B4	1st cylinder ignition signal	-
B5	3rd cylinder ignition signal	-
C1	Low-speed fan relay control	-
C2	-	-
C3	1st cylinder fuel injector	-
C4	2nd cylinder fuel injector	-
C5	-	-
D1	VVT solenoid valve negative at exhaust side	-
D2	-	-
D3	-	-
D4	3rd cylinder fuel injector	-
D5	Electronic throttle 5V power supply	-
E1	Discharge control valve negative	-
E2	-	-
E3	-	-
E4	-	-
E5	5V power supply of gasoline particulate filter pressure sensor	-
F1	Carbon canister shut-off valve negative	-
F2	-	-
F3	Gasoline particulate filter sensor signal	-
F4	Booster temperature sensor signal	-
F5	Electronic throttle valve position signal 1	-

Pin	Functions	Note
G1	Intake camshaft position sensor / Exhaust camshaft position sensor / Venturi tube pressure sensor / Boost air pressure and air temperature sensor / Exhaust control valve / Intake air pressure and air temperature sensor power supply	-
G2	-	-
G3	Engine rotation sensor 5V power supply	-
G4	Engine rotation sensor signal	-
G5	Venturi tube pressure sensor / Engine coolant temperature sensor / Intake air pressure and air temperature sensor / Exhaust control valve / Boost air pressure and air temperature sensor grounding	-
H1	Exhaust control valve position signal	-
H2	-	-
H3	-	-
H4	Exhaust camshaft position sensor signal	-
H5	GPF pressure sensor grounding	-
J1	-	-
J2	Venturi tube pressure sensor signal	-
J3	Electronic throttle valve position signal 2	-
J4	Knock sensor positive	-
J5	-	-
K1	-	-
K2	Startup signal	-
K3	Electronic throttle valve sensor grounding	-
K4	Knock sensor negative	-
K5	-	-
L1	Booster pressure sensor signal	-
L2	-	-
L3	Intake air pressure and air temperature sensor signal	-
L4	A/C medium voltage signal	-
L5	-	-
M1	Intake air temperature sensor signal	-

Pin	Functions	Note
M2	A/C request signal	-
M3	Intake CMP sensor signal	-
M4	Camshaft position sensor grounding	-
M5	Engine rotation sensor grounding	-
N1	Upstream oxygen sensor heating signal	-
N2	-	-
N3	Coolant temperature sensor signal	-
N4	Electronic throttle valve motor control positive	-
N5	Electronic throttle valve motor control negative	-

EN03g Starter power harness connector

Pin	Functions	Note
1	B+ power supply	-

EN04g Starter relay harness connector

Pin	Functions	Note
1	Excitation control signal	-

EN08g Battery positive harness connector

Pin	Functions	Note
1	B+ power supply	-

EN11g Battery to engine compartment junction box harness connector

Pin	Functions	Note
1	B+ power supply	-

EN12g Alternator to front engine compartment distribution box harness connector

Pin	Functions	Note
1	ALT power supply	-

EN13g Alternator power supply harness connector

Pin	Functions	Note
1	ALT power supply	-

EN14g Alternator signal harness connector

Pin	Functions	Note
1	LIN	-
2	-	-

EN15g 1st cylinder ignition coil harness connector

Pin	Functions	Note
1	Signal	-
2	Grounding	-
3	Power supply	-

EN16g 2nd cylinder ignition coil harness connector

Pin	Functions	Note
1	Signal	-
2	Grounding	-
3	Power supply	-

EN17g 3rd cylinder ignition coil harness connector

Pin	Functions	Note
1	Signal	-
2	Grounding	-
3	Power supply	-

EN21g 1st cylinder fuel injector harness connector

Pin	Functions	Note
1	Fuel injector positive	-
2	Fuel injector negative	-

EN22g 2nd cylinder fuel injector harness connector

Pin	Functions	Note
1	Fuel injector positive	-
2	Fuel injector negative	-

EN23g 3rd cylinder fuel injector harness connector

Pin	Functions	Note
1	Fuel injector positive	-
2	Fuel injector negative	-

EN28g Intake oil control valve harness connector

Pin	Functions	Note
1	Solenoid valve positive	-
2	Solenoid valve negative	-

EN29g Exhaust oil control valve harness connector

Pin	Functions	Note
1	Solenoid valve positive	-
2	Solenoid valve negative	-

EN30g Intake camshaft position sensor harness connector

Pin	Functions	Note
1	Power supply	-
2	Sensor ground	-
3	Signal	-

EN31g Exhaust camshaft position sensor harness connector

Pin	Functions	Note
1	Power supply	-
2	Sensor ground	-
3	Signal	-

EN32g Boost air pressure and air temperature sensor harness connector

Pin	Functions	Note
1	Sensor ground	-
2	Booster temperature sensor signal	-
3	Power supply	-
4	Booster pressure sensor signal	-

EN33g Carbon canister solenoid valve harness connector

Pin	Functions	Note
1	Solenoid valve negative	-
2	Solenoid valve positive	-

EN34g Intake air pressure and air temperature sensor harness connector

Pin	Functions	Note
1	Sensor ground	-
2	Intake air temperature sensor signal	-
3	Power supply	-
4	Intake air pressure and air temperature sensor signal	-

EN35g Electronic throttle valve harness connector

Pin	Functions	Note
1	Motor control positive	-
2	Motor control negative	-
3	Electronic throttle valve position signal 2	-
4	Electronic throttle valve sensor grounding	-
5	Power supply	-
6	Electronic throttle valve position signal 1	-

EN38g Crankshaft position sensor harness connector

Pin	Functions	Note
1	Power supply	-
2	Sensor ground	-
3	Signal	-

EN40g Knock sensor harness connector

Pin	Functions	Note
1	Sensor positive	-
2	Sensor negative	-

EN41g Oil pressure sensor harness connector

Pin	Functions	Note
1	Engine oil pressure signal	-

EN42g Engine coolant temperature sensor harness connector

Pin	Functions	Note
1	Signal	-
2	Sensor ground	-

EN44g Intake pressure relief solenoid valve harness connector

Pin	Functions	Note
1	Solenoid valve positive	-
2	Solenoid valve negative	-

EN45g EGR valve harness connector

Pin	Functions	Note
1	Sensor ground	-
2	Signal	-
3	Power supply	-
4	Control valve - negative	-
5	Control valve for exhaust gas positive	-
6	-	-

EN51g Compressor power harness connector

Pin	Functions	Note
1	Power supply	-

EN57g Engine harness to engine compartment harness connector

EN72g Venturi tube pressure sensor harness connector

Pin	Functions	Note
1	Power supply	-
2	Sensor ground	-
3	Signal	-

G01A Engine harness grounding (JLF-3G10T)

Engine harness layout drawing (BHE15-AFD)

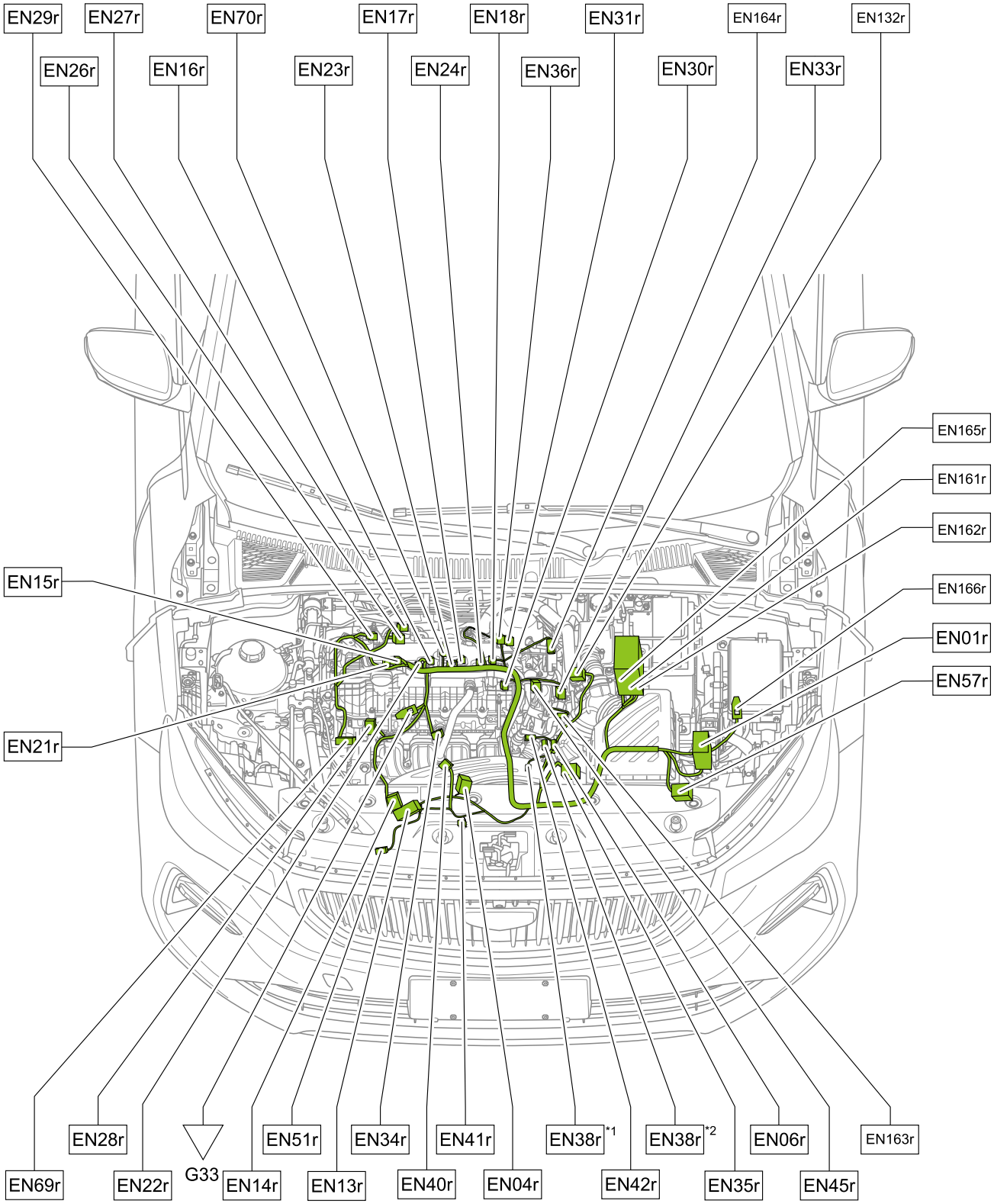

*1: Models with 6AT
*2: Models with 5MT or CVT

Engine Harness Connector List (BHE15-AFD)

Harness connector	Name	Harness connector	Name
EN01r	Engine control module harness connector	EN34r	Intake air pressure and air temperature sensor harness connector
EN04r	Starter relay harness connector	EN35r	Electronic throttle valve harness connector
EN06r	Reverse lamp switch harness connector	EN36r	Fuel control valve harness connector
EN13r	Alternator power supply harness connector	EN38r	Crankshaft position sensor harness connector
EN14r	Alternator signal harness connector	EN40r	Knock sensor harness connector
EN15r	1st cylinder ignition coil harness connector	EN41r	Oil pressure sensor harness connector
EN16r	2nd cylinder ignition coil harness connector	EN42r	Engine coolant temperature sensor harness connector
EN17r	3rd cylinder ignition coil harness connector	EN45r	EGR valve harness connector
EN18r	4th cylinder ignition coil harness connector	EN51r	Compressor power harness connector
EN21r	1st cylinder fuel injector harness connector	EN57r	Engine harness to engine compartment harness connector
EN22r	2nd cylinder fuel injector harness connector	EN69r	Oil pump harness connector
EN23r	3rd cylinder fuel injector harness connector	EN70r	Fuel rail pressure sensor harness connector
EN24r	4th cylinder fuel injector harness connector	EN132r	Electronic coolant pump harness connector
EN26r	Upstream oxygen sensor harness connector	EN161r	Engine coolant pump module to battery junction box harness connector
EN27r	Downstream oxygen sensor harness connector	EN162r	Engine compartment junction box to battery junction box harness connector
EN28r	Intake oil control valve harness connector	EN163r	EGR cooler temperature sensor harness connector
EN29r	Exhaust oil control valve harness connector	EN164r	Gasoline particulate filter differential pressure sensor harness connector
EN30r	Intake camshaft position sensor harness connector	EN165r	Alternator to battery junction box harness connector
EN31r	Exhaust camshaft position sensor harness connector	EN166r	Battery junction box to engine compartment junction box harness connector
EN33r	Carbon canister solenoid valve harness connector	-	-

Engine Harness Terminal Definition (BHE15-AFD)

EN01r Engine control module harness connector

Pin	Functions	Note
1	Fuel rail pressure sensor/Gasoline particulate filter pressure sensor/EGR valve differential pressure sensor 5V power supply	-
2	5V power supply of intake CMP sensor	-
3	Intake air pressure and air temperature sensor/Fuel pressure sensor 5V power supply	-
4	-	-
5	-	-
6	Electronic throttle valve sensor grounding	-
7	Fuel rail pressure sensor/EGR valve grounding	-
8	Fuel pressure sensor/EGR valve temperature sensor/Engine coolant temperature sensor grounding	-
9	Intake air pressure and air temperature sensor ground	-
10	Exhaust camshaft position sensor ground	-
11	Intake camshaft position sensor ground	-
12	2nd cylinder ignition signal	-
13	4th cylinder ignition signal	-
14	1st cylinder ignition signal	-
15	3rd cylinder ignition signal	-
16	Electronic throttle 5V power supply	-
17	Exhaust camshaft position sensor power supply	-
18	5V power supply of CKP sensor	-
19	Gasoline particulate filter pressure sensor/EGR valve differential pressure sensor grounding	-
20	Crankshaft position sensor ground	-
21	-	-
22	Engine coolant temperature sensor signal	-
23	-	-
24	-	-
25	-	-
26	-	-
27	-	-
28	Intake air pressure and air temperature sensor signal	-
29	-	-
30	Intake camshaft position sensor signal	-
31	Fuel pressure sensor signal	-
32	-	-
33	-	-
34	Electronic throttle valve position signal 2	-
35	-	-
36	Fuel rail pressure sensor signal	-
37	-	-
38	Intake air temperature sensor signal	-
39	A/C middle-pressure switch signal	-
40	Electronic throttle valve position signal 1	-
41	EGR valve differential pressure sensor signal	-
42	Gasoline particulate filter sensor signal	-
43	-	-
44	-	-
45	Exhaust camshaft position sensor signal	-
46	Knock sensor positive	-
47	Knock sensor negative	-
48	EGR valve temperature sensor signal	-
49	EGR valve position feedback signal	-
50	-	-
51	A/C high/low-pressure switch signal	-
52	-	-
53	-	-
54	-	-
55	-	-
56	Clutch bottom switch "normally closed" signal	-

Pin	Functions	Note
57	Crankshaft position sensor signal	-
58	-	-
59	-	-
60	-	-
61	-	-
62	-	-
63	-	-
64	-	-
65	-	-
66	-	-
67	-	-
68	-	-
69	-	-
70	-	-
71	-	-
72	-	-
73	-	-
74	-	-
75	-	-
76	4th cylinder fuel injector positive	-
77	4th cylinder fuel injector negative	-
78	1st cylinder fuel injector negative	-
79	3rd cylinder fuel injector positive	-
80	2nd cylinder fuel injector positive	-
81	-	-
82	-	-
83	1st cylinder fuel injector positive	-
84	3rd cylinder fuel injector negative	-
85	2nd cylinder fuel injector negative	-
86	Electronic throttle valve motor control negative	-
87	High-pressure exhaust gas recirculation valve control positive	-
88	-	-
89	-	-
90	Fuel control valve negative	-
91	Electronic throttle valve motor control positive	-
92	High-pressure exhaust gas recirculation valve control negative	-
93	-	-

Pin	Functions	Note
94	-	-
95	Fuel control valve positive	-

EN04r Starter relay harness connector

Pin	Functions	Note
1	Excitation control signal	-

EN06r Reverse lamp switch harness connector

Pin	Functions	Note
1	Grounding	-
2	Reverse gear switch signal	-

EN13r Alternator power supply harness connector

Pin	Functions	Note
1	ALT power supply	-

EN14r Alternator signal harness connector

Pin	Functions	Note
1	LIN	-
2	-	-

EN15r 1st cylinder ignition coil harness connector

Pin	Functions	Note
1	Signal	-
2	Grounding	-
3	Power supply	-

EN16r 2nd cylinder ignition coil harness connector

Pin	Functions	Note
1	Signal	-
2	Grounding	-
3	Power supply	-

EN17r 3rd cylinder ignition coil harness connector

Pin	Functions	Note
1	Signal	-
2	Grounding	-
3	Power supply	-

EN18r 4th cylinder ignition coil harness connector

Pin	Functions	Note
1	Signal	-
2	Grounding	-
3	Power supply	-

EN21r 1st cylinder fuel injector harness connector

Pin	Functions	Note
1	Fuel injector positive	-
2	Fuel injector negative	-

EN22r 2nd cylinder fuel injector harness connector

Pin	Functions	Note
1	Fuel injector positive	-
2	Fuel injector negative	-

EN23r 3rd cylinder fuel injector harness connector

Pin	Functions	Note
1	Fuel injector positive	-
2	Fuel injector negative	-

EN24r 4th cylinder fuel injector harness connector

Pin	Functions	Note
1	Fuel injector positive	-
2	Fuel injector negative	-

EN26r Upstream oxygen sensor harness connector

Pin	Functions	Note
1	Upstream oxygen sensor power supply	-
2	Upstream oxygen sensor ground	-
3	Upstream oxygen sensor heating grounding	-
4	Heating power supply of the front oxygen sensor	-
5	Adjustment resistance of the upstream oxygen sensor	-
6	Upstream oxygen sensor signal	-

EN27r Downstream oxygen sensor harness connector

Pin	Functions	Note
1	Downstream oxygen sensor signal	-
2	Downstream oxygen sensor ground	-
3	Downstream oxygen sensor heating grounding	-
4	Rear oxygen sensor heating power supply	-

EN28r Intake oil control valve harness connector

Pin	Functions	Note
1	Intake oil control valve positive	-
2	Intake oil control valve negative	-

EN29r Exhaust oil control valve harness connector

Pin	Functions	Note
1	Vent VVT solenoid valve	-
2	Exhaust oil control valve negative	-

EN30r Intake camshaft position sensor harness connector

Pin	Functions	Note
1	5V power supply of sensor	-
2	Sensor ground	-
3	Sensor signal	-

EN31r Exhaust camshaft position sensor harness connector

Pin	Functions	Note
1	Power supply of sensor	-
2	Sensor ground	-
3	Sensor signal	-

EN33r Carbon canister solenoid valve harness connector

Pin	Functions	Note
1	Canister solenoid valve positive	-
2	Carbon canister solenoid valve negative	-

EN34r Intake air pressure and air temperature sensor harness connector

Pin	Functions	Note
1	Intake air temperature sensor signal	-
2	5V power supply of sensor	-
3	Sensor ground	-
4	Intake air pressure and air temperature sensor signal	-

EN35r Electronic throttle valve harness connector

Pin	Functions	Note
1	Electronic throttle valve position signal 1	-
2	Electronic throttle 5V power supply	-
3	Motor control positive	-
4	Electronic throttle valve position signal 2	-
5	Motor control negative	-
6	Electronic throttle valve sensor grounding	-

EN36r fuel control valve harness connector

Pin	Functions	Note
1	Control valve - positive	-
2	Control valve - negative	-

EN38r Crankshaft position sensor harness connector

Pin	Functions	Note
1	Sensor signal	-
2	Sensor ground	-
3	5V power supply of sensor	-

EN40r Knock sensor harness connector

Pin	Functions	Note
1	Sensor positive	-
2	Sensor negative	-

EN41r Oil pressure sensor harness connector

Pin	Functions	Note
1	Engine oil pressure signal	-

EN42r Engine coolant temperature sensor harness connector

Pin	Functions	Note
1	Sensor signal	-
2	Sensor ground	-

EN45r EGR valve harness connector

Pin	Functions	Note
1	Grounding	-
2	Position feedback signal	-
3	5V power supply	-
4	Control negative	-
5	Control positive	-

EN51r Compressor power harness connector

Pin	Functions	Note
1	Main relay power supply	-
2	A/C variable capacity valve	-
3	A/C compressor power supply	-

EN57r Engine harness to engine compartment harness connector

EN69r Oil pump harness connector

Pin	Functions	Note
1	Oil pump power supply	-
2	Oil pump signal	-

EN70r fuel rail pressure sensor harness connector

Pin	Functions	Note
1	Sensor ground	-
2	Sensor signal	-
3	5V power supply of sensor	-

EN132r electronic coolant pump harness connector

Pin	Functions	Note
1	Electronic coolant pump control signal	-
2	LIN	-
3	B+ power supply	-
4	-	-

EN161r Engine coolant pump module to battery junction box harness connector

Pin	Functions	Note
1	Electronic coolant pump B+ power supply	-

EN162r Engine compartment junction box to battery junction box harness connector

Pin	Functions	Note
1	Front motor compartment fuse and relay box B+ power supply	-

EN163r EGR cooler temperature sensor harness connector

Pin	Functions	Note
1	Sensor signal	-
2	Sensor ground	-

EN164r Gasoline particulate filter differential pressure sensor harness connector

Pin	Functions	Note
1	Sensor signal	-
2	Sensor ground	-
3	5V power supply of sensor	-

EN165r Alternator to battery junction box harness connector

Pin	Functions	Note
1	Alternator, starter B+ power supply	-

EN166r Battery junction box to engine compartment junction box harness connector

Pin	Functions	Note
1	B+ power supply	-

G33 Engine harness grounding

Instrument harness layout drawing

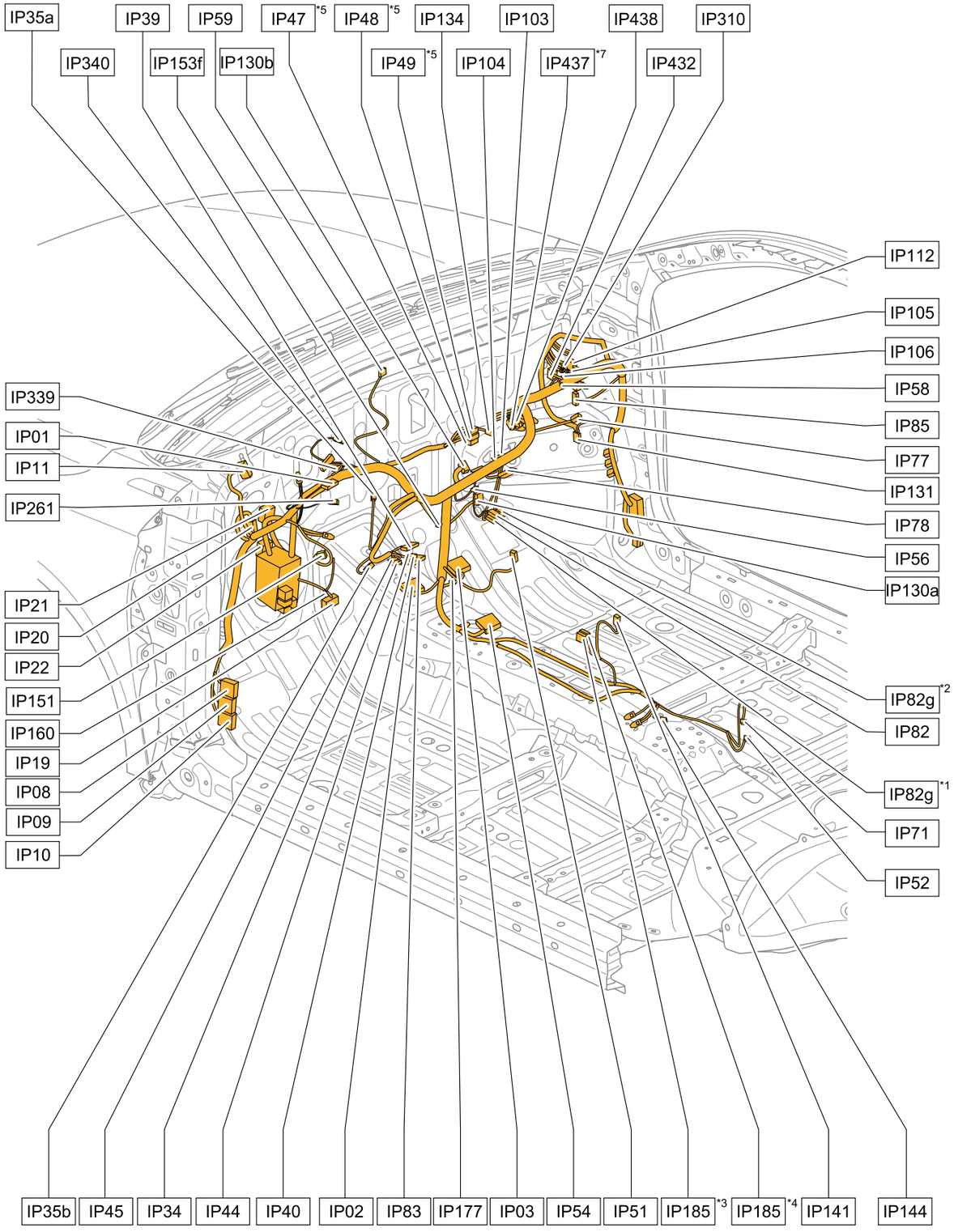

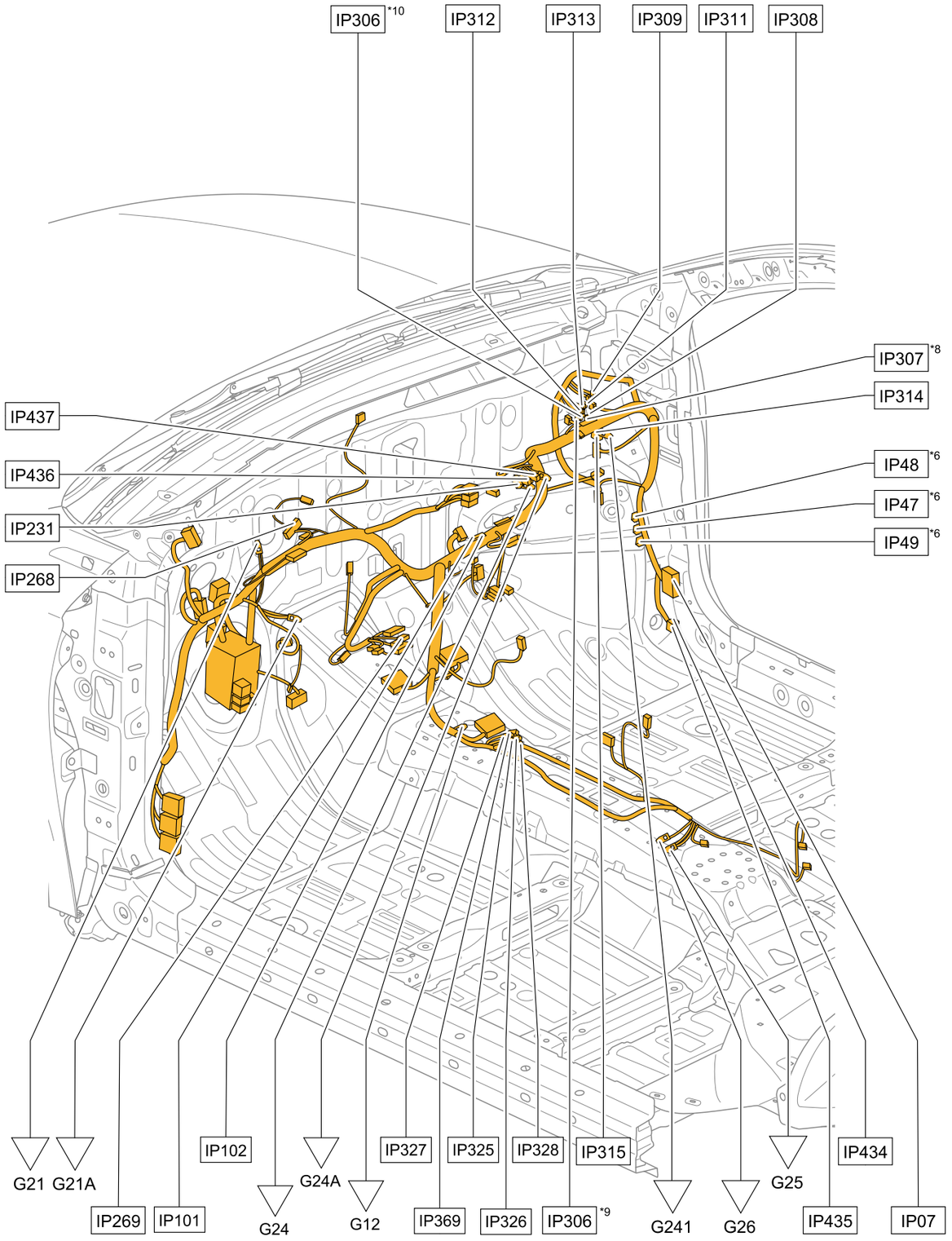

*1: Type I
*2: Type II
*3: Models with CVT
*4: Models with 6AT
*5: Models with 8-inch head unit or radio
*6: Models with 12.3-inch head unit
*7: Models without digital radio
*8: Models with digital radio/CD player
*9: Models with reversing camera image
*10: Models with around view monitor

Instrument harness connector list

Harness connector	Name	Harness connector	Name
IP01	Combination instrument harness connector	IP106	JC06 harness connector
IP02	Instrument panel harness to engine compartment harness connector	IP112	Gateway harness connector
IP03	Instrument panel harness to engine compartment harness connector	IP130a	Instrument panel harness to electric A/C harness connector (for models without rear air outlet)
IP07	Instrument panel harness to floor harness connector	IP130b	Instrument panel harness to electric A/C harness connector (for models with rear air outlet)
IP08	Instrument panel harness to floor harness connector	IP131	Instrument panel harness to electric A/C harness connector
IP09	Instrument panel harness to floor harness connector	IP134	Multimedia display harness connector
IP10	Instrument panel harness to floor harness connector	IP141	Electronic parking brake switch harness connector
IP11	Instrument panel harness to roof harness connector	IP144	Park brake lever harness connector
IP19	OBD harness connector	IP151	Instrument panel switch harness connector
IP20	Body control module harness connector	IP153f	Interior temperature sensor harness connector
IP21	Body control module harness connector	IP160	Left front tweeter harness connector
IP22	Body control module harness connector	IP177	Instrument panel harness to engine compartment harness connector
IP34	Electronic steering column lock harness connector	IP185	Electronic gear selector module harness connector
IP35a	Electric power steering control module harness connector (models with brushless EPS)	IP231	Multimedia display harness connector
IP35b	Electric power steering control module harness connector (models with brushed EPS)	IP261	Combination instrument harness connector
IP39	Clock spring harness connector	IP268	Emergency call system harness connector
IP40	Clock spring harness connector	IP269	Steering wheel heating control module harness connector
IP44	Start switch harness connector	IP306	Multimedia control module harness connector
IP45	Start switch harness connector	IP307	Multimedia control module harness connector
IP47	Multimedia control module harness connector	IP308	Multimedia control module harness connector

13.2.7 Instrument harness

Harness connector	Name	Harness connector	Name
IP48	Multimedia control module harness connector	IP309	Multimedia control module harness connector
IP49	Multimedia control module harness connector	IP310	Multimedia control module harness connector
IP51	Front keyless vehicle antenna-interior harness connector	IP311	Multimedia control module harness connector
IP52	Middle keyless vehicle antenna harness connector	IP312	Multimedia control module harness connector
IP54	Airbag control module harness connector	IP313	Multimedia control module harness connector
IP56	Hazard warning lamp switch harness connector	IP314	Multimedia control module harness connector
IP58	Front passenger airbag harness connector	IP315	Multimedia control module harness connector
IP59	Light sensor harness connector	IP325	Instrument panel harness to floor harness connector (Antenna)
IP71	Auxiliary instrument panel power outlet harness connector	IP326	Instrument panel harness to floor harness connector (Antenna)
IP77	Air fragrance unit harness connector	IP327	Instrument panel harness to floor harness connector (Antenna)
IP78	Front A/C panel switch harness connector	IP328	Instrument panel harness to floor harness connector (Antenna)
IP82	Power outlet harness connector	IP339	GPS4G antenna harness connector
IP82g	Power outlet harness connector	IP340	GPS4G antenna harness connector
IP83	Electronic anti-theft coil harness connector	IP369	Instrument panel harness to floor harness connector (Around view monitor)
IP85	A/C control module harness connector	IP432	Ripple anti pinch module harness connector
IP101	JC01 harness connector	IP434	Instrument panel harness to floor harness connector (Around view monitor)
IP102	JC02 harness connector	IP435	Instrument panel harness to floor harness connector (Around view monitor)
IP103	JC03 harness connector	IP436	Audio amplifier harness connector
IP104	JC04 harness connector	IP437	Audio amplifier harness connector
IP105	JC05 harness connector	IP438	Audio amplifier harness connector

Instrument Harness Terminal Definition

IP01 combination instrument harness connector

Pin	Functions	Note
1	-	-
2	-	-
3	-	-
4	-	-
5	-	-
6	Private CAN-H	-
7	Private CAN-L	-
8	-	-
9	-	-
10	-	-
11	Brake fluid level sensor signal	-
12	-	-
13	Parking brake switch signal	-
14	Engine oil pressure signal	-
15	Fluid level sensor grounding	-
16	Grounding	-
17	-	-
18	-	-
19	-	-
20	-	-
21	-	-
22	-	-
23	-	-
24	Ignition power supply 1	-
25	-	-
26	-	-
27	-	-
28	Fuel level sensor reference terminal	-
29	Fuel level sensor fuel resistance	-
30	IF CAN-H	-
31	IF CAN-L	-
32	B+ power supply	-

IP02 Instrument panel harness to engine compartment harness connector

IP03 Instrument panel harness to engine compartment harness connector

IP07 Instrument panel harness to floor harness connector

IP08 Instrument panel harness to floor harness connector

IP09 Instrument panel harness to floor harness connector

IP10 Instrument panel harness to floor harness connector

IP11 Instrument panel harness to roof harness connector

IP19 OBD harness connector

Pin	Functions	Note
1	-	-
2	-	-
3	IF CAN-H	-
4	Grounding	-
5	Grounding	-
6	IF CAN-H	Models with PEPS
6	PT CAN-H	Models without PEPS
7	-	-
8	-	-
9	-	-
10	-	-
11	IF CAN-L	-
12	-	-
13	-	-
14	IF CAN-L	Models with PEPS
14	PT CAN-L	Models without PEPS
15	-	-
16	B+ power supply	-

IP20 Body control module harness connector

Pin	Functions	Note
1	Starting request signal	-
2	IG1 feedback signal	-
3	Brake switch "ON" signal	-
4	-	-
5	-	-

Pin	Functions	Note
6	-	-
7	-	-
8	-	-
9	-	-
10	Clutch bottom switch signal	-
11	-	-
12	-	-
13	Front turn signal lamp fault feedback signal	-
14	Engine hood switch status signal	-
15	Key insertion signal	-
16	-	-
17	Reverse gear switch signal	-
18	Front wiper stop-position signal	-
19	-	-
20	-	-
21	Hazard warning lamp switch signal	-
22	Start-up relay 1 feedback	-
23	Start relay 2 control	Models with PEPS
23	Start relay 1 control	Models without PEPS
24	-	-
25	-	-
26	-	-
27	Front defroster/nozzle relay control	-
28	Low-speed wiper relay control	-
29	High-speed wiper relay control	-
30	-	-
31	-	-
32	-	-
33	-	-
34	Horn relay control	-
35	-	-
36	Rear defroster relay control	-
37	-	-
38	-	-
39	-	-
40	-	-

Pin	Functions	Note
41	-	-
42	-	-
43	Central control door lock power supply	-
44	Central unlocking signal	-
45	Grounding 2	-
46	Left low beam control	-
47	Central locking signal	-
48	-	-
49	Power supply for washing	-
50	-	-
51	Window washer motor control	-
52	Exterior lamp power supply 2	-

IP21 Body control module harness connector

Pin	Functions	Note
1	Right high beam signal output	-
2	Left daytime running light signal output	-
3	Trunk lock motor unlocking signal	-
4	High-mounted brake lamp signal output	-
5	Power saving signal output	-
6	Right rear fog lamp signal output	-
7	Brake lamp signal output	-
8	Reverse lamp signal output	-
9	Left high beam signal output	-
10	Interior lamp control signal	-
11	Left front fog lamp signal output	-
12	Right position lamp / right license lamp signal output	-
13	Backlight signal output	-
14	Signal output of right turn signal	-
15	Signal output of left turn signal	-
16	Right daytime running light signal output	-
17	Left position lamp / left license lamp signal output	-
18	Right front fog lamp signal output	-
19	Grounding 1	-
20	Right low beam signal output	-
21	Exterior lamp power supply 1	-

Pin	Functions	Note
22	B+ power supply	-
23	Turn signal lamp power supply	-
24	-	-
25	-	-

IP22 Body control module harness connector

Pin	Functions	Note
1	Hazard indicator lamp	-
2	Anti-theft indicator	-
3	-	-
4	Lamp effect signal	-
5	-	-
6	Start switch backlight lamp control	-
7	-	-
8	-	-
9	Rearview mirror folding signal	-
10	Rearview mirror unfolding signal	-
11	-	-
12	-	-
13	-	-
14	Central door lock status indicator lamp	-
15	Electronic parking status indicator	-
16	-	-
17	-	-
18	Luggage compartment light signal output	-
19	Rainwater and light sensor signal	-
20	ACC feedback	-
21	IG2 feedback	-
22	Crash signal	-
23	-	-
24	Ignition relay 2 control	-
25	Accessory relay control	-
26	-	-
27	-	-
28	-	-
29	LIN1	-
30	-	-
31	-	-
32	-	-
33	-	-
34	Ignition relay 1 control	-
35	-	-
36	-	-
37	-	-
38	-	-
39	Window lift prohibition indicator	-
40	-	-
41	CF CAN-L	Models with PEPS
41	IF CAN-L	Models without PEPS
42	CF CAN-H	Models with PEPS
42	IF CAN-H	Models without PEPS
43	LIN2	-
44	-	-
45	-	-
46	-	-
47	-	-
48	PT CAN-L	-
49	PT CAN-H	-
50	-	-
51	-	-
52	LIN	-

IP34 Electronic steering column lock harness connector

Pin	Functions	Note
1	B+ power supply	-
2	Grounding	-
3	-	-
4	-	-
5	Ignition power supply 1	-
6	Speed signal	-
7	CF CAN-H	-
8	CF CAN-L	-

IP35a Electric power steering control module harness connector (models with brushless EPS)

Pin	Functions	Note
1	Ignition power supply 1	-
2	CS CAN-L	Models with PEPS
2	PT CAN-L	Models without PEPS
3	-	-
4	-	-
5	CS CAN-H	Models with PEPS
5	PT CAN-H	Models without PEPS
6	-	-
7	-	-
8	-	-

IP35b Electric power steering control module harness connector (models with brushed EPS)

Pin	Functions	Note
1	Ignition power supply 1	-
2	CS CAN-L	Models with PEPS
2	PT CAN-L	Models without PEPS
3	-	-
4	-	-
5	CS CAN-H	Models with PEPS
5	PT CAN-H	Models without PEPS
6	-	-
7	-	-
8	-	-

IP39 clock spring harness connector

Pin	Functions	Note
1	-	-
2	-	-
3	Ignition power supply 1	-
4	-	-
5	CS CAN-H	Models with PEPS
5	PT CAN-H	Models without PEPS
6	CS CAN-L	Models with PEPS
6	PT CAN-L	Models without PEPS
7	Steering wheel signal grounding	-
8	-	-
9	-	-
10	Grounding	-
11	-	-
12	-	-
13	-	-
14	-	-
15	-	-
16	B+ power supply	-
17	Cruise control switch signal	-
18	Backlight power supply	-
19	Steering wheel control output - left	-
20	Steering wheel control output - right	-
21	Cruise control switch grounding	-
22	Cruise control setting signal	-
23	-	-
24	-	-
25	-	-
26	-	-

IP40 clock spring harness connector

Pin	Functions	Note
1	Horn relay control	-
2	Horn switch grounding	-
3	Airbag negative	-
4	Airbag positive	-

IP44 Start switch harness connector

Pin	Functions	Note
1	Key insertion signal	-
2	Grounding	-

IP45 Start switch harness connector

Pin	Functions	Note
1	B+ power supply	-
2	Ignition relay 1 control	-
3	Accessory relay control	-
4	Startup signal	-
5	B+ power supply	-
6	IG2 power output	-

IP47 Multimedia control module harness connector

Pin	Functions	Note
1	Steering wheel control input LH	-
2	Steering wheel control ground	-
3	Steering wheel control input - right	-
4	Accessory power supply	-
5	-	-
6	Parking sensor signal	-
7	B+ power supply	-
8	Grounding	-

IP48 Multimedia control module harness connector

Pin	Functions	Note
1	Right rear full frequency speaker positive	-
2	Right rear full frequency speaker negative	-
3	Right front woofer/Right front tweeter/ Right front full range speaker positive	-
4	Right front woofer/Right front tweeter/ Right front full range speaker negative	-
5	Left front woofer/Left front tweeter/Left front full range speaker positive	-
6	Left front woofer/Left front tweeter/Left front full range speaker negative	-
7	Left rear full frequency speaker positive	-
8	Left rear full frequency speaker negative	-

IP49 Multimedia control module harness connector

Pin	Functions	Note
1	-	-
2	Microphone 2 signal positive	-
3	Microphone 1 signal negative	-
4	-	-
5	Microphone 2 signal negative	-
6	Microphone 1 signal positive	-
7	IF CAN-L	-
8	Reversing camera power supply	-
9	Reversing camera grounding	-
10	IF CAN-H	-
11	Reversing video signal positive	-
12	Reversing video signal negative	-
13	LIN	-
14	-	-
15	-	-
16	-	-
17	Private CAN-H	-
18	E-CALL function mute signal	-
19	-	-
20	Private CAN-L	-

IP51 Front keyless vehicle antenna-interior harness connector

Pin	Functions	Note
1	Antenna positive	-
2	Antenna negative	-
3	-	-
4	-	-

IP52 Middle keyless vehicle antenna harness connector

Pin	Functions	Note
1	Antenna positive	-
2	Antenna negative	-
3	-	-
4	-	-

IP54 Airbag control module harness connector

Pin	Functions	Note
1	Front left side airbag positive	-
2	Front left side airbag negative	-
3	Front right side airbag negative	-

Pin	Functions	Note
4	Front right side airbag positive	-
5	Ignition power supply 1	-
6	Grounding	-
7	Front passenger seat belt buckle sensor signal	-
8	Right rear seat belt buckle sensor signal (right side)	-
9	Left rear seat belt buckle sensor signal	-
10	Driver's airbag positive	-
11	Driver's airbag negative	-
12	Left side B-pillar impact sensor positive	-
13	Front passenger airbag positive	-
14	Front passenger airbag negative	-
15	Driver seat belt buckle sensor signal	-
16	-	-
17	-	-
18	-	-
19	-	-
20	Right side B-pillar impact sensor positive	-
21	-	-
22	Left side inflatable curtain positive	-
23	Left side inflatable curtain negative	-
24	Right side inflatable curtain negative	-
25	Right side inflatable curtain positive	-
26	-	-
27	-	-
28	-	-
29	-	-
30	-	-
31	-	-
32	-	-
33	PT CAN-L	Models without PEPS
33	CS CAN-L	Models with PEPS

Pin	Functions	Note
34	PT CAN-H	Models without PEPS
34	CS CAN-H	Models with PEPS type I
34	Collision signal output	Models with PEPS type II
35	-	-
36	-	-
37	Left side B-pillar impact sensor negative	-
38	-	-
39	-	-
40	Front passenger detection switch signal	-
41	-	-
42	-	-
43	-	-
44	-	-
45	Right side B-pillar impact sensor negative	-
46	Collision signal output	-
47	Right rear seat belt buckle sensor signal (middle)	-
48	-	-
49	-	-
50	-	-

IP56 hazard warning lamp switch harness connector

Pin	Functions	Note
1	Hazard warning lamp switch signal	-
2	Grounding	-
3	-	-
4	Hazard indicator lamp	-

IP58 Front passenger airbag harness connector

Pin	Functions	Note
1	Airbag positive	-
2	Airbag negative	-

IP59 light sensor harness connector

Pin	Functions	Note
1	Anti-theft indicator grounding	-
2	Rainwater and light sensor power supply	-
3	-	-
4	Sensor ground	-
5	Sensor signal	-
6	Rainwater and light sensor signal	-
7	Rainwater and light sensor grounding	-
8	Anti-theft indicator	-

IP71 Auxiliary instrument panel power outlet harness connector

Pin	Functions	Note
1	Accessory power supply	Type I
1	Grounding	Type II
2	-	-
3	Grounding	Type I
3	Accessory power supply	Type II

IP77 Air fragrance unit harness connector

Pin	Functions	Note
1	B+ power supply	-
2	LIN	-
3	Grounding	-

IP78 Front A/C panel switch harness connector

Pin	Functions	Note
1	Grounding	-
2	Mode damper actuator/Ambient temperature sensor/Temperature damper actuator/Evaporator temperature sensor/Rainwater and light sensor ground	-
3	-	-
4	CF CAN-L	Models with PEPS
4	PT CAN-L	Models without PEPS
5	CF CAN-H	Models with PEPS
5	PT CAN-H	Models without PEPS
6	-	-
7	A/C request signal	-
8	Backlight power supply	-
9	Internal circulation signal	-
10	External circulation signal	-
11	Temperature motor heating signal	-
12	Temperature motor cooling signal	-
13	Damper motor face-blowing mode	-
14	Damper motor defroster mode	-
15	Start switch grounding	-
16	-	-
17	-	-
18	Start switch backlight power supply	-
19	Start switch signal 2	-
20	Start switch signal 1	-
21	Mode damper actuator/Temperature damper actuator power supply	-
22	A/C blower module feedback signal positive	-
23	A/C blower module feedback signal negative	-
24	A/C blower module control signal	-
25	Blower motor relay control	-
26	Temperature damper motor position feedback signal	-
27	Internal and external circulation damper actuator feedback signal	-
28	B+ power supply	-
29	Ignition power supply 2	Models with JLC-4G15B or JLF-3G10T

Pin	Functions	Note
29	Ignition power supply 1	Models with BHE15-AFD
30	Rainwater and light sensor light signal	-
31	-	-
32	Mode damper actuator feedback signal	-
33	-	-
34	Ambient temperature sensor signal	-
35	Evaporator temperature sensor signal	-
36	Interior temperature sensor signal	-
37	-	-
38	Hazard warning lamp switch indicator lamp	-
39	Hazard warning lamp switch request signal	-
40	Hazard warning lamp switch ground	-

IP82 Power outlet harness connector

Pin	Functions	Note
1	Accessory power supply	-
2	-	-
3	Grounding	-

IP82g Power outlet harness connector

Pin	Functions	Note
1	USB power supply	-
2	USB positive signal	Type I
2	USB negative signal	Type II
3	Grounding	Type I
3	USB negative signal	Type II
4	USB negative signal	Type I
4	Grounding	Type II
5S	Shield grounding	-

IP83 Electronic anti-theft coil harness connector

Pin	Functions	Note
1	Working indicator positive	-
2	Working indicator negative	-
3	B+ power supply	-
4	Grounding	-
5	LIN	-
6	-	-

IP85 A/C control module harness connector

Pin	Functions	Note
1	Grounding	-
2	Mode damper actuator/Ambient temperature sensor/Temperature damper actuator/Evaporator temperature sensor grounding	-
3	-	-
4	PT CAN-L	-
5	PT CAN-H	-
6	-	-
7	A/C request signal	-
8	-	-
9	Internal circulation signal	-
10	External circulation signal	-
11	Temperature motor heating signal	-
12	Temperature motor cooling signal	-
13	Damper motor face-blowing mode	-
14	Damper motor defroster mode	-
15	-	-
16	-	-
17	-	-
18	-	-
19	-	-
20	-	-
21	Mode damper actuator/Temperature damper actuator power supply	-
22	A/C blower module feedback signal positive	-
23	A/C blower module feedback signal negative	-
24	A/C blower module control signal	-
25	Blower motor relay control	-
26	Temperature damper motor position feedback signal	-
27	-	-
28	B+ power supply	-

Pin	Functions	Note
29	Ignition power supply 2	Models with JLC-4G15B or JLF-3G10T
29	Ignition power supply 1	Models with BHE15-AFD
30	-	-
31	-	-
32	Mode damper actuator feedback signal	-
33	-	-
34	Ambient temperature sensor signal	-
35	Evaporator temperature sensor signal	-
36	-	-
37	-	-
38	-	-
39	-	-
40	-	-

IP101 JC01 harness connector

Pin	Functions	Note
1	IF CAN-H	-
2	IF CAN-H	-
3	IF CAN-H	-
4	-	-

IP102 JC02 harness connector

Pin	Functions	Note
1	IF CAN-L	-
2	IF CAN-L	-
3	IF CAN-L	-
4	-	-

IP103 JC03 harness connector

Pin	Functions	Note
1	PT CAN-H	-
2	PT CAN-H	-
3	PT CAN-H	-
4	PT CAN-H	-

IP104 JC04 harness connector

Pin	Functions	Note
1	PT CAN-L	-
2	PT CAN-L	-
3	PT CAN-L	-
4	PT CAN-L	-

IP105 JC05 harness connector

Pin	Functions	Note
1	IF CAN-H	-
2	IF CAN-H	-
3	IF CAN-H	-
4	IF CAN-H	-

IP106 JC06 harness connector

Pin	Functions	Note
1	IF CAN-L	-
2	IF CAN-L	-
3	IF CAN-L	-
4	IF CAN-L	-

IP112 gateway harness connector

Pin	Functions	Note
1	CF CAN-H	-
2	PT CAN-H	-
3	CS CAN-H	-
4	-	-
5	-	-
6	IF CAN-H	-
7	-	-
8	-	-
9	-	-
10	-	-
11	CF CAN-L	-
12	PT CAN-L	-
13	CS CAN-L	-
14	-	-
15	-	-
16	IF CAN-L	-
17	-	-
18	Ignition power supply 1	-
19	B+ power supply	-
20	Grounding	-

IP130a Instrument panel harness to electric A/C harness connector (models without rear air outlet)

IP130b Instrument panel harness to electric A/C harness connector (models with rear air outlet)

IP131 Instrument panel harness to electric A/C harness connector

IP134 Multimedia display harness connector

Pin	Functions	Note
1	Grounding	-
2	-	-
3	-	-
4	B+ power supply	-
5	-	-
6	-	-
7	-	-
8	-	-

IP141 Electronic parking brake switch harness connector

Pin	Functions	Note
1	Backlight power supply	-
2	Auto Hold indicator switch signal	-
3	Backlight power supply/Electronic parking brake switch grounding	-
4	EPB switch indicator ground	-
5	Electronic parking status indicator	-
6	-	-
7	Automatic parking working indicator power supply	-
8	Automatic parking working indicator signal	-
9	Electronic parking brake application signal input	-
10	Electronic parking brake application signal output	-
11	Electronic parking brake release signal output	-
12	Electronic parking brake release signal input	-

IP144 Park brake lever harness connector

Pin	Functions	Note
1	Parking brake switch signal	-

IP151 Instrument panel switch harness connector

Pin	Functions	Note
1	Backlight power supply	-
2	-	-
3	Trunk switch/Backlight lamp/ESC OFF switch ground	-
4	Trunk door lock switch signal	-
5	ESC OFF switch signal	-
6	Headlamp height adjustment switch negative	-
7	Headlamp height adjustment switch positive	-
8	Headlamp height adjustment switch signal output	-
9	ESC OFF indicator power supply	-
10	ESC OFF indicator signal	-

IP153f Interior temperature sensor harness connector

Pin	Functions	Note
1	Sensor signal	-
2	Sensor ground	-

IP160 Left front tweeter harness connector

Pin	Functions	Note
1	Speaker positive	-
2	Speaker negative	-

IP177 Instrument panel harness to engine compartment harness connector

IP185 Electronic gear selector module harness connector

Pin	Functions	Note
1	-	-
2	-	-
3	-	-
4	-	-
5	Downshifting signal	Model with 6AT
6	Grounding	Models with CVT
6	Upshifting signal	Model with 6AT

Pin	Functions	Note
7	Ignition power supply 1	Model with 6AT/ CVT
8	P-gear lock-up control valve negative	Models with CVT
8	Grounding	Model with 6AT
9	Downshifting signal	Models with CVT
9	Solenoid valve control signal	Model with 6AT
10	Manual mode	Models with CVT
10	Gearshift lever power supply	Model with 6AT
11	Upshifting signal	Models with CVT
12	P-gear lock-up control valve positive	Models with CVT

IP231 Multimedia display harness connector

Pin	Functions	Note
1	Display LVDS1+	-
2	Display LVDS2-	-
3	Display LVDS1-	-
4	Display LVDS2+	-
5	ACC wake-up signal	-
6	Display screen grounding	-
7S	Display shielding ground	-

IP261 combination instrument harness connector

Pin	Functions	Note
1	Combination instrument LVDS+	-
2	USB positive signal	-
3	Combination instrument LVDS-	-
4	USB negative signal	-
5S	Shield grounding	-

IP268 Emergency call system harness connector

Pin	Functions	Note
1	Ignition power supply 1	Type I
1	B+ power supply	Type II
2	Ignition power supply 1	-
3	E-CALL function mute signal	-
4	-	-
5	-	-
6	Microphone 2 signal positive	-
7	-	-
8	-	-
9	Emergency backup speaker positive	-
10	E-CALL switch negative	-
11	Crash signal	-
12	E-CALL indicator ground	-
13	-	-
14	Emergency backup speaker positive	-
15	Emergency backup speaker negative	-
16	Speaker negative	-
17	Speaker positive	-
18	-	-
19	IF CAN-H	-
20	B+ power supply	-
21	-	-
22	-	-
23	-	-
24	-	-
25	-	-
26	Microphone 2 signal negative	-
27	-	-
28	Grounding	-
29	Emergency backup speaker negative	-
30	E-CALL switch positive	-
31	-	-
32	E-CALL function mute signal	-
33	-	-
34	E-CALL indicator power supply	-
35	-	-
36	-	-
37	-	-
38	-	-
39	IF CAN-L	-
40	Grounding	-

IP269 Steering wheel heating control module harness connector

Pin	Functions	Note
1	Accessory power supply	-
2	-	-
3	-	-
4	Grounding	-

IP306 Multimedia control module harness connector

Pin	Functions	Note
1	360 degree panoramic left camera signal	-
2	360 degree panoramic front camera signal	-
3	360 degree panoramic rear camera signal	-
4	360 degree panoramic right camera signal	-
1S	360 degree panoramic left camera grounding	-
2S	360 degree panoramic front camera grounding	-
3S	360 degree panoramic rear camera grounding	-
4S	360 degree panoramic right camera grounding	-

IP307 Multimedia control module harness connector

Pin	Functions	Note
1	Combination instrument USB negative signal	-
2	Combination instrument LVDS-	-
3	Combination instrument USB positive signal	-
4	Combination instrument LVDS+	-
5S	Shield grounding	-

IP308 Multimedia control module harness connector

Pin	Functions	Note
1	USB power supply	-
2	Power outlet USB positive signal	-
3	Grounding	-
4	Power outlet USB negative signal	-
5S	Shield grounding	-

IP309 Multimedia control module harness connector

Pin	Functions	Note
1	AM/FM antenna signal	-

IP310 Multimedia control module harness connector

Pin	Functions	Note
1	GPS antenna signal	-
1S	GPS antenna grounding	-

IP311 Multimedia control module harness connector

Pin	Functions	Note
1	4G antenna signal 1	-
1S	4G antenna ground 1	-

IP312 Multimedia control module harness connector

Pin	Functions	Note
1	Display LVDS2+	-
2	Display LVDS1-	-
3	Display LVDS2-	-
4	Display LVDS1+	-
5	ACC wake-up signal	-
6	Display screen grounding	-
7S	Display shielding ground	-

IP313 Multimedia control module harness connector

Pin	Functions	Note
1	4G antenna signal 2	-
1S	4G antenna ground 2	-

IP314 Multimedia control module harness connector

Pin	Functions	Note
1	DAB antenna signal	-

IP315 Multimedia control module harness connector

Pin	Functions	Note
1	-	-
2	-	-
3	-	-
4	-	-
5	-	-
6	Crash signal	-
7	-	-
8	-	-
9	-	-

Pin	Functions	Note
10	-	-
11	-	-
12	-	-

IP325 Instrument panel harness to floor harness connector (Antenna)

IP326 Instrument panel harness to floor harness connector (Antenna)

IP327 Instrument panel harness to floor harness connector (Antenna)

IP328 Instrument panel harness to floor harness connector (Antenna)

IP339 GPS4G antenna harness connector

Pin	Functions	Note
1	GPS antenna signal	-
1S	GPS antenna grounding	-

IP340 GPS4G antenna harness connector

Pin	Functions	Note
1	4G antenna signal 1	-
2	4G antenna signal 2	-
1S	4G antenna ground 1	-
2S	4G antenna ground 2	-

IP369 Instrument panel harness to floor harness connector (Around view monitor)

IP432 Ripple anti pinch module harness connector

Pin	Functions	Note
1	FL and RR window power supply	-
2	FL window glass up signal	-
3	-	-
4	FL window glass down signal	-
5	-	-
6	RL window glass up signal	-
7	Glass lift switch grounding	-
8	RL window glass down signal	-
9	-	-
10	FL and RR window grounding	-
11	-	-
12	FR and RL window power supply	-
13	Left front window regulator switch signal	-
14	FR window glass up signal	-
15	-	-
16	FR window glass down signal	-
17	-	-
18	RR window glass up signal	-
19	-	-
20	RR window glass down signal	-
21	Right front window regulator switch signal	-
22	FR and RL window grounding	-
23	Left rear window regulator switch signal	-
24	LIN	-
25	Right rear window regulator switch signal	-

IP434 Instrument panel harness to floor harness connector (Around view monitor)

IP435 Instrument panel harness to floor harness connector (Around view monitor)

IP436 Audio amplifier harness connector

Pin	Functions	Note
1	USB signal	-

IP437 Audio amplifier harness connector

Pin	Functions	Note
1	AM/FM antenna signal	Model without digital radio
1	DAB antenna signal	Model equipped with digital radio/CD player

IP438 Audio amplifier harness connector

Pin	Functions	Note
1	AM/FM antenna signal	-

G12 Instrument panel harness grounding

G21 Instrument panel harness grounding

G21A Instrument panel harness grounding

G24 Instrument panel harness grounding

G241 Instrument panel harness grounding

G24A Instrument panel harness grounding

G25 Instrument panel harness grounding

G26 Instrument panel harness grounding

A/C harness layout drawing

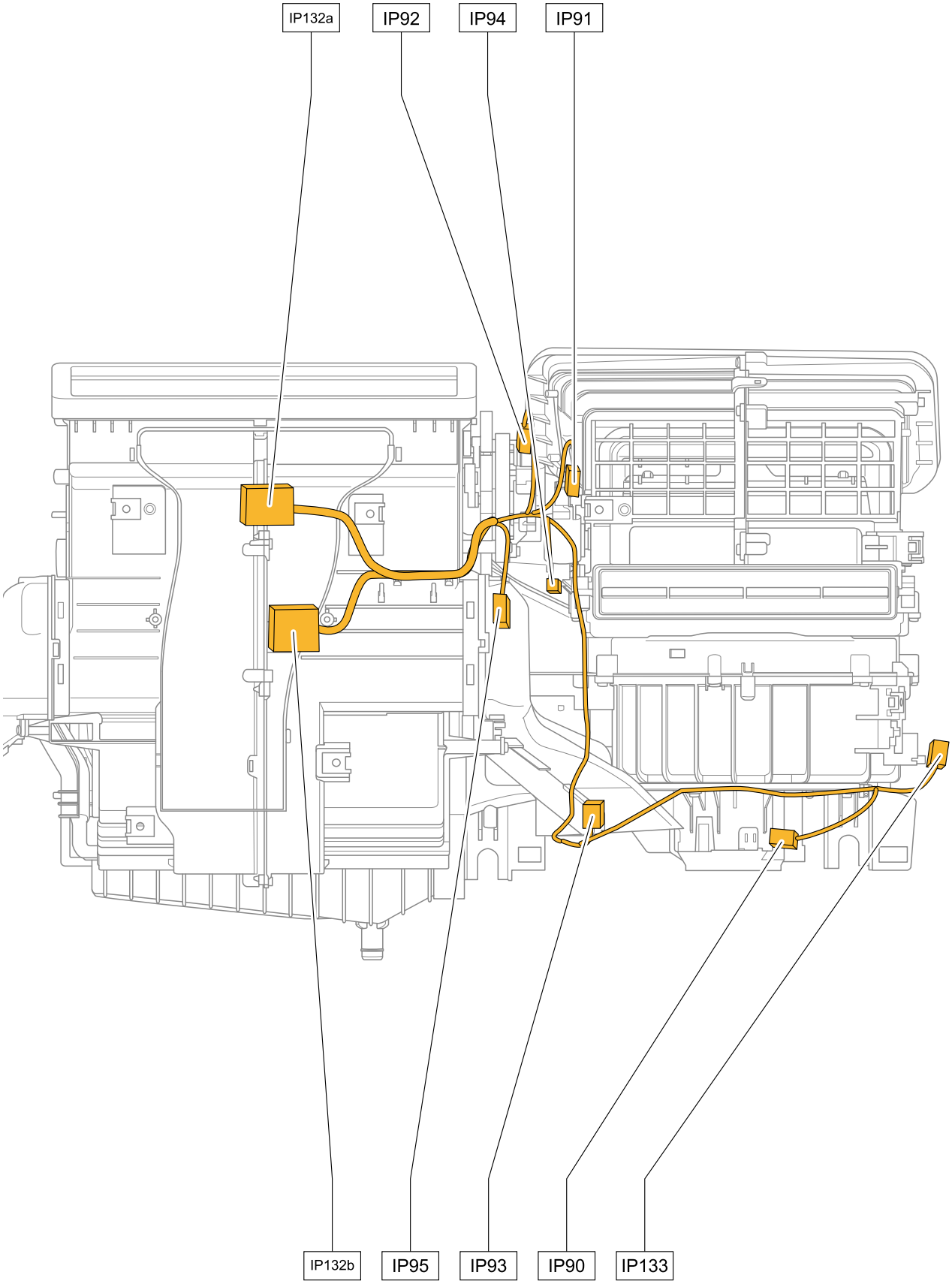

A/C harness connector list

Harness connector	Name	Harness connector	Name
IP90	A/C blower module harness connector	IP95	Temperature damper actuator harness connector
IP91	Internal and external circulation actuator harness connector	IP132a	Electric A/C harness to instrument panel harness connector (models without rear air outlet)
IP92	Mode damper actuator harness connector	IP132b	Electric A/C harness to instrument panel harness connector (models with rear air outlet)
IP93	A/C speed control module harness connector	IP133	Electric A/C harness to instrument panel harness connector
IP94	Evaporator temperature sensor harness connector	-	-

A/C Harness Terminal Definition

IP90 A/C blower module harness connector

Pin	Functions	Note
1	Blower motor positive	-
2	Blower motor negative	-

IP91 Internal and external circulation actuator harness connector

Pin	Functions	Note
1	External circulation signal	-
2	Internal circulation signal	-
3	-	-
4	Power supply of sensor	-
5	Feedback signal	-
6	Sensor ground	-

IP92 Mode damper actuator harness connector

Pin	Functions	Note
1	Face-blowing mode	-
2	Defrosting mode	-
3	-	-
4	Power supply of sensor	-
5	Feedback signal	-
6	Sensor ground	-

IP93 A/C speed control module harness connector

Pin	Functions	Note
1	Blower motor negative	-
2	A/C blower module control signal	-
3	Grounding	-

IP94 evaporator temperature sensor harness connector

Pin	Functions	Note
1	Sensor ground	-
2	Signal	-

IP95 Temperature Damper Actuator Harness Connector

Pin	Functions	Note
1	Refrigeration signal	-
2	Heating signal	-
3	-	-
4	Power supply of sensor	-
5	Position feedback signal	-
6	Sensor ground	-

IP132a Electric A/C harness to instrument panel harness connector (models without rear air outlet)

IP132b Electric A/C harness to instrument panel harness connector (models with rear air outlet)

IP133 Electric A/C harness to instrument panel harness connector

Roof harness layout drawing

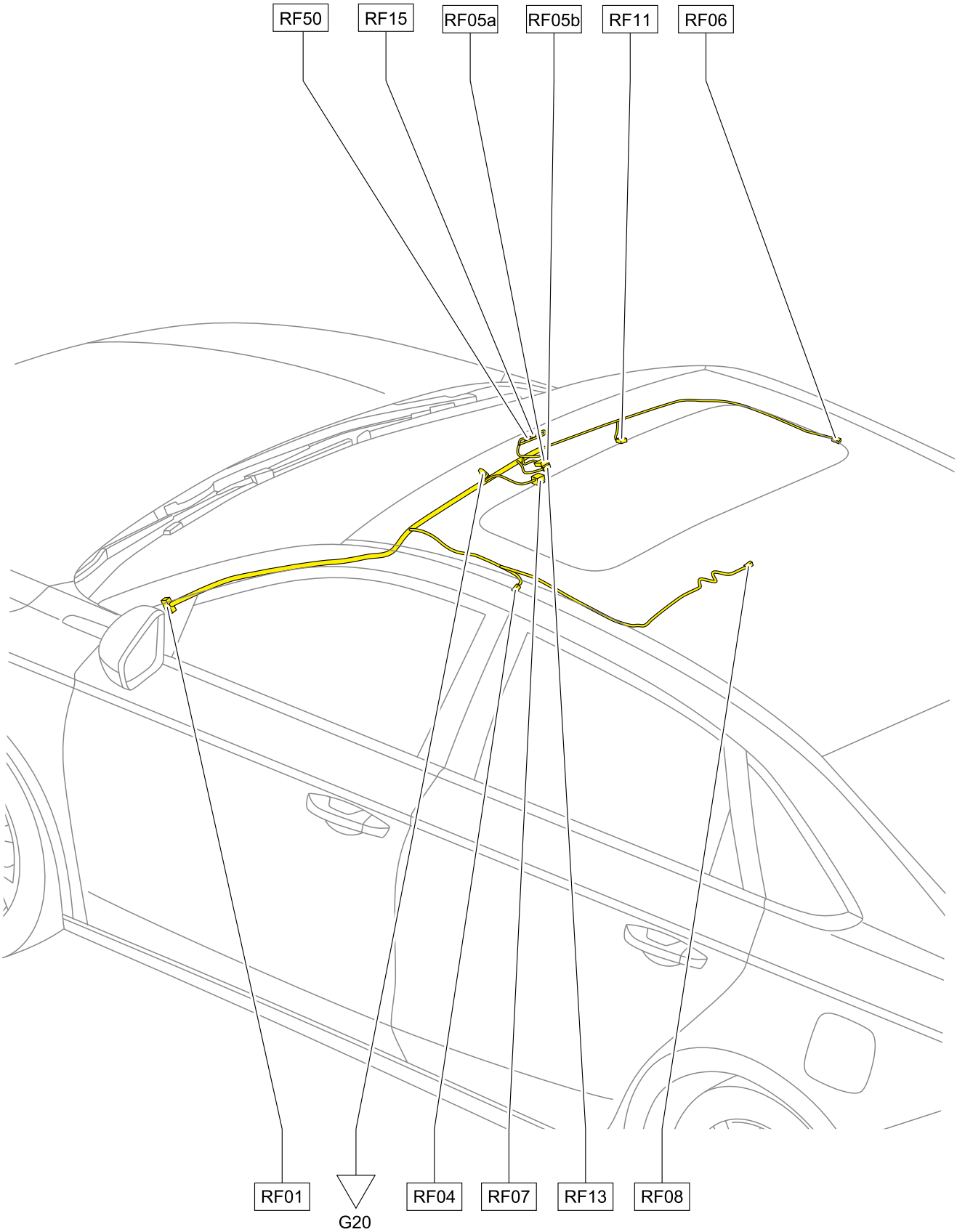

Roof harness connector list

Harness connector	Name	Harness connector	Name
RF01	Roof to instrument panel harness connector	RF08	Rear reading lamp harness connector
RF04	Left side inflatable curtain harness connector	RF11	Emergency call system switch harness connector
RF05a	Front reading lamp harness connector (models with E-CALL in Eastern Europe or without E-CALL)	RF13	Driver side microphone harness connector
RF05b	Front reading lamp harness connector (models with E-CALL in Saudi Arabia)	RF15	Driving recorder harness connector
RF06	Right side inflatable curtain harness connector	RF50	ETC harness connector
RF07	Sunroof control module harness connector	-	-

Roof harness terminal definition

RF01 Roof to instrument panel harness connector

RF04 Left side inflatable curtain harness connector

Pin	Functions	Note
1	Inflatable curtain positive	-
2	Inflatable curtain negative	-

RF05a Front reading lamp harness connector (models with E-CALL in Eastern Europe or without E-CALL)

Pin	Functions	Note
1	Power supply	-
2	-	-
3	Grounding	-
4	-	-
5	Door control signal	-
6	-	-

RF05b Front reading lamp harness connector (models with E-CALL in Saudi Arabia)

Pin	Functions	Note
1	Power supply	-
2	Grounding	-
3	Door control signal	-
4	E-CALL switch positive	-
5	E-CALL switch negative	-
6	E-CALL indicator power supply	-
7	E-CALL indicator ground	-
8	Backlight power supply	-
9	-	-
10	-	-

RF06 Right side inflatable curtain harness connector

Pin	Functions	Note
1	Inflatable curtain positive	-
2	Inflatable curtain negative	-

RF07 Sunroof control module harness connector

Pin	Functions	Note
1	-	-
2	-	-
3	LIN	-
4	-	-
5	-	-
6	B+ power supply	-
7	-	-
8	Grounding	-
9	-	-
10	-	-

RF08 Rear reading lamp harness connector

Pin	Functions	Note
1	B+ power supply	-
2	Grounding	-
3	Door control signal	-
4	-	-

RF11 Emergency call system switch harness connector

Pin	Functions	Note
1	-	-
2	-	-
3	-	-
4	-	-
5	-	-
6	-	-
7	-	-
8	Speaker negative	-
9	-	-
10	Speaker positive	-
11	-	-
12	-	-

RF13 Driver side microphone harness connector

Pin	Functions	Note
1	Microphone 1 signal positive	-
2	Microphone 1 signal negative	-
3	Microphone 2 signal positive	-
4	Microphone 2 signal negative	-

RF15 Driving recorder harness connector

Pin	Functions	Note
1	-	-
2	-	-
3	-	-
4	Accessory power supply	-

Pin	Functions	Note
5	Grounding	-
6	B+ power supply	-

RF50 ETC harness connector

Pin	Functions	Note
1	B+ power supply	-
2	Ignition power supply 1	-
3	Grounding	-
4	-	-
5	-	-

G20 Roof harness grounding

Floor harness layout drawing

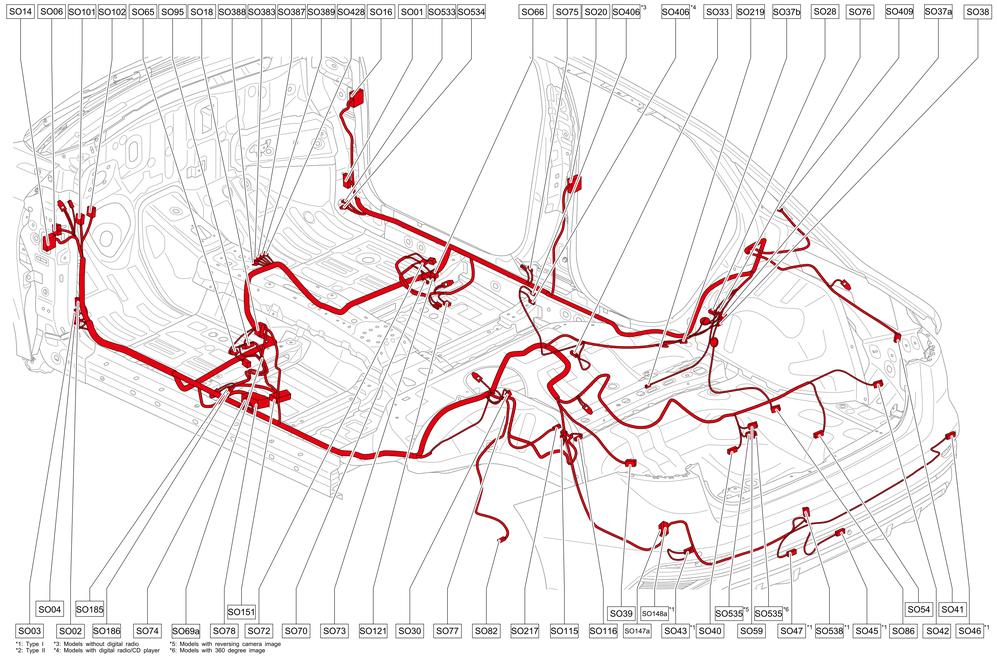

*1: Type I
*2: Type II
*3: Models without digital radio
*4: Models with digital radio/CD player
*5: Models with reversing camera image
*6: Models with 360 degree image

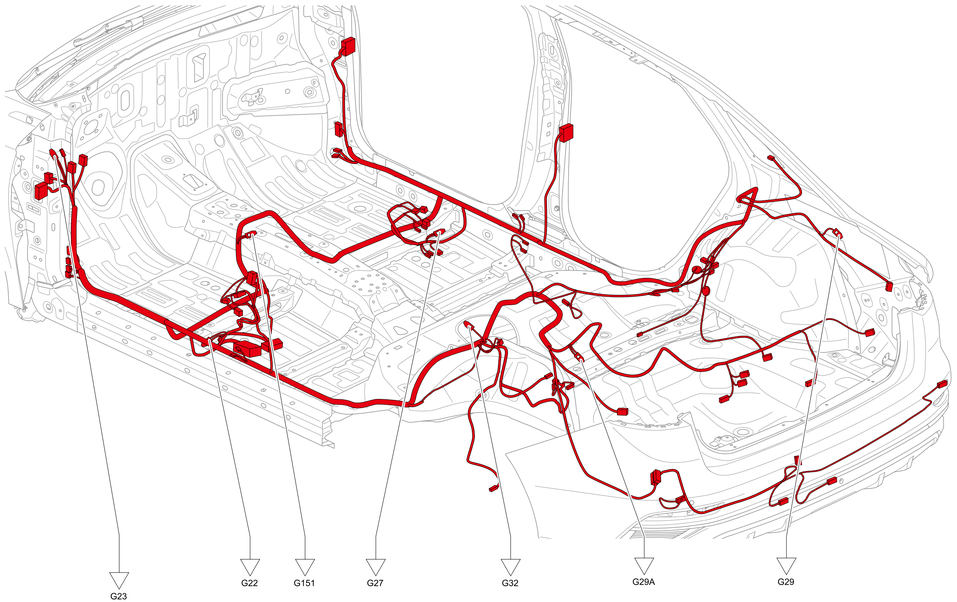

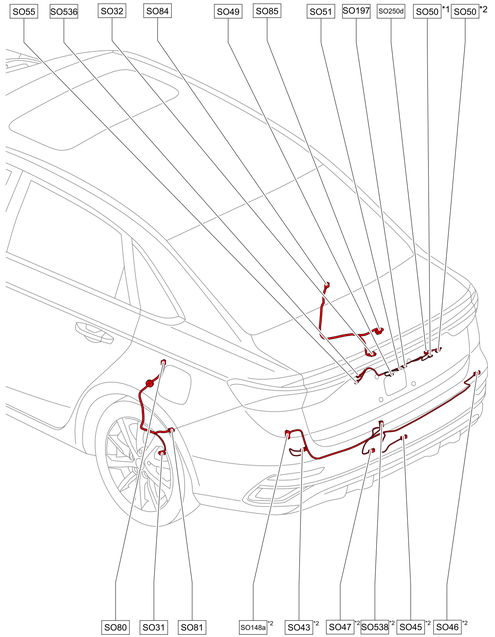

Floor Harness Connector List

Harness connector	Name	Harness connector	Name
SO01	Floor harness to instrument panel harness connector	SO75	Right side impact sensor harness connector
SO02	Floor harness to instrument panel harness connector	SO76	Floor harness to right rear brake caliper motor harness connector
SO03	Floor harness to instrument panel harness connector	SO77	Floor harness to left rear brake caliper motor harness connector
SO04	Floor harness to instrument panel harness connector	SO78	Electronic parking brake control module harness connector
SO06	Floor harness to engine compartment harness connector	SO80	left rear brake caliper motor harness to floor harness connector
SO14	Floor harness to left front door harness connector	SO81	Left rear brake caliper motor harness connector
SO16	Floor harness to right front door harness connector	SO82	Left rear wheel speed sensor harness connector
SO18	Floor harness to left rear door harness connector	SO84	Right rear brake caliper motor harness to floor harness connector
SO20	Floor harness to right rear door harness connector	SO85	Right rear brake caliper motor harness connector
SO28	Trunk keyless vehicle antenna harness connector	SO86	Right rear wheel speed sensor harness connector
SO30	Fuel pump harness connector	SO95	Floor harness to driver seat harness connector
SO31	Left rear wheel speed sensor harness connector	SO101	Body control module harness connector
SO32	Right rear wheel speed sensor harness connector	SO102	Body control module harness connector
SO33	Rear window defroster positive harness connector	SO115	Fuel pressure sensor harness connector
SO37a	High-mounted brake lamp harness connector (models with PEPS)	SO116	Canister harness connector
SO37b	High-mounted brake lamp harness connector (models without PEPS)	SO121	Around view monitor harness connector
SO38	Trunk lamp harness connector	SO147a	Floor harness to rear bumper harness connector
SO39	Side wall left rear combination lamp harness connector	SO148a	Rear bumper harness to floor harness connector
SO40	Left trunk combination lamp harness connector	SO151	Window lifter control module harness connector
SO41	Side wall right rear combination lamp harness connector	SO185	JC21 harness connector
SO42	Right trunk combination lamp harness connector	SO186	JC22 harness connector

13.2.10 Floor harness

Harness connector	Name	Harness connector	Name
SO43	Left rear reversing radar probe harness connector	SO197	360 degree panoramic rear camera harness connector
SO45	Right rear mid reversing radar probe harness connector	SO217	Rear left seat belt buckle sensor harness connector
SO46	Right rear reversing radar probe harness connector	SO219	Rear right seat belt buckle sensor harness connector
SO47	Left rear fog lamp harness connector	SO250d	Trunk outer open switch harness connector
SO49	Left rear License lamp harness connector	SO383	Floor harness to instrument panel harness connector (Antenna)
SO50	Right rear License lamp harness connector	SO387	Floor harness to instrument panel harness connector (Antenna)
SO51	Rear view camera harness connector	SO388	Floor harness to instrument panel harness connector (Antenna)
SO54	Trunk lid latch motor harness connector	SO389	Floor harness to instrument panel harness connector (Antenna)
SO55	Trunk harness to floor harness connector	SO406	AM/FM/DAB antenna amplifier harness connector
SO59	Floor harness to trunk harness connector	SO409	Radio frequency receiving control module harness connector
SO65	Front left side airbag harness connector	SO428	Floor harness to instrument panel harness connector (Around view monitor)
SO66	Front right side airbag harness connector	SO533	Floor harness to instrument panel harness connector (Around view monitor)
SO69a	Driver seat belt buckle sensor harness connector (models with manual seat)	SO534	Floor harness to instrument panel harness connector (Around view monitor)
SO70	Passenger seat belt buckle sensor harness connector	SO535	Floor harness to license lamp plate harness connector (Around view monitor)
SO72	Passenger side cushion heating harness connector	SO536	License lamp plate harness to floor harness connector (Around view monitor)
SO73	Passenger detection sensor harness connector	SO538	Rear bumper antenna harness connector
SO74	Left side impact sensor harness connector	-	-

Floor Harness Terminal Definition

SO01 Floor harness to instrument panel harness connector

SO02 Floor harness to instrument panel harness connector

SO03 Floor harness to instrument panel harness connector

SO04 Floor harness to instrument panel harness connector

SO06 Floor harness to engine compartment harness connector

SO14 Floor harness to left front door harness connector

SO16 Floor harness to right front door harness connector

SO18 Floor harness to left rear door harness connector

SO20 Floor harness to right rear door harness connector

SO28 Trunk keyless vehicle antenna harness connector

Pin	Functions	Note
1	Antenna positive	-
2	Antenna negative	-
3	-	-
4	-	-

SO30 Fuel pump harness connector

Pin	Functions	Note
1	Fuel level sensor reference terminal	-
2	Fluid level sensor grounding	-
3	Power supply	-
4	Grounding	-
5	Fuel level sensor fuel resistance	-
6	-	-

SO31 Left rear wheel speed sensor harness connector

Pin	Functions	Note
1	Sensor positive	-
2	Sensor negative	-

SO32 Right rear wheel speed sensor harness connector

Pin	Functions	Note
1	Sensor positive	-
2	Sensor negative	-

SO33 Rear window defroster positive harness connector

Pin	Functions	Note
1	Power supply	-

SO37a High-mounted brake lamp harness connector (models with PEPS)

Pin	Functions	Note
1	Grounding	-
2	Power supply	-

SO37b High-mounted brake lamp harness connector (models without PEPS)

Pin	Functions	Note
1	Power supply	-
2	Grounding	-

SO38 Trunk lamp harness connector

Pin	Functions	Note
1	Power supply	-
2	Grounding	-

SO39 Side wall left rear combination lamp harness connector

Pin	Functions	Note
1	Position lamp power supply	-
2	Brake lamp power supply	-
3	Turn signal lamp power supply	-
4	Trunk door lock signal	-
5	Lamp effect signal	-
6	-	-
7	Side sign lamp signal	-
8	Grounding	-

SO40 Left trunk combination lamp harness connector

Pin	Functions	Note
1	Position lamp power supply	-
2	Reverse lamp power supply	-
3	Lamp effect signal	-
4	-	-

Pin	Functions	Note
5	-	-
6	Grounding	-

SO41 Side wall right rear combination lamp harness connector

Pin	Functions	Note
1	Position lamp power supply	-
2	Brake lamp power supply	-
3	Turn signal lamp power supply	-
4	Trunk door lock signal	-
5	Lamp effect signal	-
6	-	-
7	Side sign lamp signal	-
8	Grounding	-

SO42 Right trunk combination lamp harness connector

Pin	Functions	Note
1	Position lamp power supply	-
2	Reverse lamp power supply	-
3	Lamp effect signal	-
4	-	-
5	-	-
6	Grounding	-

SO43 Left rear reversing radar probe harness connector

Pin	Functions	Note
1	Grounding	-
2	Left rear reversing radar ID signal	-
3	Signal	-
4	Power supply	-

SO45 Right rear mid reversing radar probe harness connector

Pin	Functions	Note
1	Grounding	-
2	Rear right middle reversing radar ID signal	-
3	Signal	-
4	Power supply	-

SO46 Right rear reversing radar probe harness connector

Pin	Functions	Note
1	Grounding	-
2	-	-
3	Signal	-
4	Power supply	-

SO47 Left rear fog lamp harness connector

Pin	Functions	Note
1	Power supply	-
2	Grounding	-

SO49 Left rear license lamp harness connector

Pin	Functions	Note
1	Power supply	-
2	Grounding	-

SO50 Right rear license lamp harness connector

Pin	Functions	Note
1	Power supply	-
2	Grounding	-

SO51 Rear view camera harness connector

Pin	Functions	Note
1	Power supply	-
2	Grounding	-
3	Video signal positive	-
4	Video signal negative	-

SO54 Trunk lid latch motor harness connector

Pin	Functions	Note
1	Trunk status switch signal	-
2	Grounding	-
3	Unlocking signal	-

SO55 Trunk harness to floor harness connector

SO59 Floor harness to trunk harness connector

SO65 Front left side airbag harness connector

Pin	Functions	Note
1	Airbag positive	-
2	Airbag negative	-

SO66 Front right side airbag harness connector

Pin	Functions	Note
1	Airbag positive	-
2	Airbag negative	-

SO69a Driver seat belt buckle sensor harness connector (models with manual seat)

Pin	Functions	Note
1	Signal	-
2	Grounding	-

SO70 Passenger seat belt buckle sensor harness connector

Pin	Functions	Note
1	Signal	-
2	Grounding	-

SO72 Passenger side cushion heating harness connector

Pin	Functions	Note
1	Heater power supply	-
2	Sensor positive	-
3	Sensor negative	-
4	Grounding	-

SO73 Passenger detection sensor harness connector

Pin	Functions	Note
1	Signal	-
2	Grounding	-

SO74 Left side impact sensor harness connector

Pin	Functions	Note
1	Sensor positive	-
2	Sensor negative	-

SO75 Right side impact sensor harness connector

Pin	Functions	Note
1	Sensor positive	-
2	Sensor negative	-

SO76 Floor harness to right rear brake caliper motor harness connector

SO77 Floor harness to left rear brake caliper motor harness connector

SO78 Electronic parking brake control module harness connector

Pin	Functions	Note
1	-	-
2	-	-
3	-	-
4	-	-
5	-	-
6	-	-
7	-	-
8	-	-
9	Electronic parking brake application signal output	-
10	Electronic parking brake release signal output	-
11	-	-
12	Right rear brake caliper motor positive	-
13	Right EPB motor power supply	-
14	Left rear brake caliper motor positive	-
15	Left EPB motor power supply	-
16	CS CAN-H	-
17	CS CAN-L	-
18	Electronic parking brake application signal input	-
19	Electronic parking brake release signal input	-
20	-	-
21	-	-
22	Ignition power supply 1	-
23	-	-
24	-	-
25	-	-
26	-	-
27	Right rear brake caliper motor negative	-
28	Right EPB motor grounding	-
29	Left rear brake caliper motor negative	-
30	Left EPB motor grounding	-

SO80 Left rear brake caliper motor harness to floor harness connector

SO81 Left rear brake caliper motor harness connector

Pin	Functions	Note
1	Left rear brake caliper motor negative	-
2	Left rear brake caliper motor positive	-

SO82 Left rear wheel speed sensor harness connector

Pin	Functions	Note
1	Sensor positive	-
2	Sensor negative	-

SO84 Right rear brake caliper motor harness to floor harness connector

SO85 Right rear brake caliper motor harness connector

Pin	Functions	Note
1	Right rear brake caliper motor negative	-
2	Right rear brake caliper motor positive	-

SO86 Right rear wheel speed sensor harness connector

Pin	Functions	Note
1	Sensor positive	-
2	Sensor negative	-

SO95 Floor harness to driver seat harness connector

SO101 Body control module harness connector

Pin	Functions	Note
1	Left front window regulator switch signal	-
2	-	-
3	Right front window regulator switch signal	-
4	Rearview mirror folding switch signal	-
5	-	-
6	Trunk status switch signal	-
7	-	-
8	-	-
9	Door lock state switch (except driver side)	-
10	LIN	-
11	Front antenna - negative	-
12	Trunk antenna negative	-
13	-	-
14	Right front window regulator switch signal	-
15	Right rear window regulator switch signal	-
16	-	-
17	-	-
18	-	-
19	RR door control switch signal	-
20	Left front door lock status signal	-
21	-	-
22	RL door control switch signal	-
23	-	-
24	Front antenna - positive	-
25	Trunk antenna positive	-
26	-	-
27	Start switch signal 1	-
28	Cruise control switch signal 2	-
29	Trunk outer open switch signal	-
30	Central lock switch signal	-
31	Central instrument panel switch/Clock spring /Window regulator switch grounding	-
32	Right rear window regulator switch signal	-
33	Interior trunk switch signal	-
34	Left rear window regulator switch signal	-
35	Left front courtesy switch signal	-
36	Window locking switch signal	-
37	Trunk keyless vehicle antenna positive	-
38	Left front door antenna positive	-
39	Middle antenna positive	-
40	Start switch signal 2	-
41	-	-
42	Cruise control switch signal 1	-
43	Left front door handle lock sensor	-
44	-	-
45	-	-
46	-	-
47	Right front courtesy switch signal	-
48	-	-

Pin	Functions	Note
49	Left rear window regulator switch signal	-
50	Trunk keyless vehicle antenna negative	-
51	Left front door antenna negative	-
52	Middle antenna negative	-

SO102 Body control module harness connector

Pin	Functions	Note
1	RR window glass down signal	-
2	RR window glass up signal	-
3	FL and RR window power supply	-
4	FL and RR window grounding	-
5	FL window glass down signal	-
6	FL window glass up signal	-
7	-	-
8	RL window glass up signal	-
9	RL window glass down signal	-
10	FR and RL window power supply	-
11	FR and RL window grounding	-
12	FR window glass up signal	-
13	FR window glass down signal	-
14	-	-

SO115 Fuel pressure sensor harness connector

Pin	Functions	Note
1	Signal	-
2	Sensor ground	-
3	Power supply	-

SO116 canister harness connector

Pin	Functions	Note
1	Solenoid valve positive	-
2	Solenoid valve negative	-

SO121 Around view monitor harness connector

Pin	Functions	Note
1	-	-
2	-	-
3	-	-
4	IF CAN-H	-
5	-	-
6	-	-
7	Accessory power supply	-
8	B+ power supply	-
9	-	-
10	-	-
11	-	-
12	IF CAN-L	-
13	-	-
14	-	-
15	Parking sensor signal	-
16	Grounding	-

SO147a Floor harness to rear bumper harness connector

SO148a Rear bumper harness to floor harness connector

SO151 Window lifter control module harness connector

Pin	Functions	Note
1	FL and RR window power supply	-
2	FL window glass up signal	-
3	-	-
4	FL window glass down signal	-
5	-	-
6	RL window glass up signal	-
7	Glass lift switch grounding	-
8	RL window glass down signal	-
9	-	-
10	FL and RR window grounding	-
11	-	-
12	FR and RL window power supply	-
13	Left front window regulator switch signal	-
14	FR window glass up signal	-
15	-	-
16	FR window glass down signal	-
17	-	-
18	RR window glass up signal	-
19	-	-
20	RR window glass down signal	-
21	Right front window regulator switch signal	-

Pin	Functions	Note
22	FR and RL window grounding	-
23	Left rear window regulator switch signal	-
24	LIN	-
25	Right rear window regulator switch signal	-

SO185 JC21 harness connector

Pin	Functions	Note
1	-	-
2	IF CAN-L	-
3	IF CAN-L	-
4	IF CAN-L	-

SO186 JC22 harness connector

Pin	Functions	Note
1	-	-
2	IF CAN-H	-
3	IF CAN-H	-
4	IF CAN-H	-

SO197 360 degree panoramic rear camera harness connector

Pin	Functions	Note
1	360 degree panoramic rear camera signal	-
1S	360 degree panoramic rear camera grounding	-

SO217 Rear left seat belt buckle sensor harness connector

Pin	Functions	Note
1	Signal	-
2	Grounding	-

SO219 Rear right seat belt buckle sensor harness connector

Pin	Functions	Note
1	Right middle row right belt buckle sensor signal	-
2	Right middle row right belt buckle sensor grounding	-
3	Second middle row seat belt buckle sensor signal	-
4	Second middle row seat belt buckle sensor grounding	-

SO250d Trunk outer open switch harness connector

Pin	Functions	Note
1	Switch signal	-
2	Grounding	-

SO383 Floor harness to instrument panel harness connector (Antenna)

SO387 Floor harness to instrument panel harness connector (Antenna)

SO388 Floor harness to instrument panel harness connector (Antenna)

SO389 Floor harness to instrument panel harness connector (Antenna)

SO406 AM/FM/DAB antenna amplifier harness connector

Pin	Functions	Note
1	AM/FM/DAB antenna signal	-

SO409 Radio frequency receiving control module harness connector

Pin	Functions	Note
1	B+ power supply	-
2	-	-
3	-	-
4	-	-
5	Grounding	-
6	LIN	-

SO428 Floor harness to instrument panel harness connector (Around view monitor)

SO533 Floor harness to instrument panel harness connector (Around view monitor)

SO534 Floor harness to instrument panel harness connector (Around view monitor)

SO535 Floor harness to license lamp plate harness connector (Around view monitor)

SO536 License lamp plate harness to floor harness connector (Around view monitor)

SO538 Rear bumper antenna harness connector

13.2.10 Floor harness

Pin	Functions	Note
1	Antenna positive	-
2	Antenna negative	-
3	-	-
4	-	-

G151 Floor harness grounding

G22 Floor harness grounding

G23 Floor harness grounding

G27 Floor harness grounding

G29 Floor harness grounding

G29A Floor harness grounding

G32 Floor harness grounding

Seat harness layout drawing

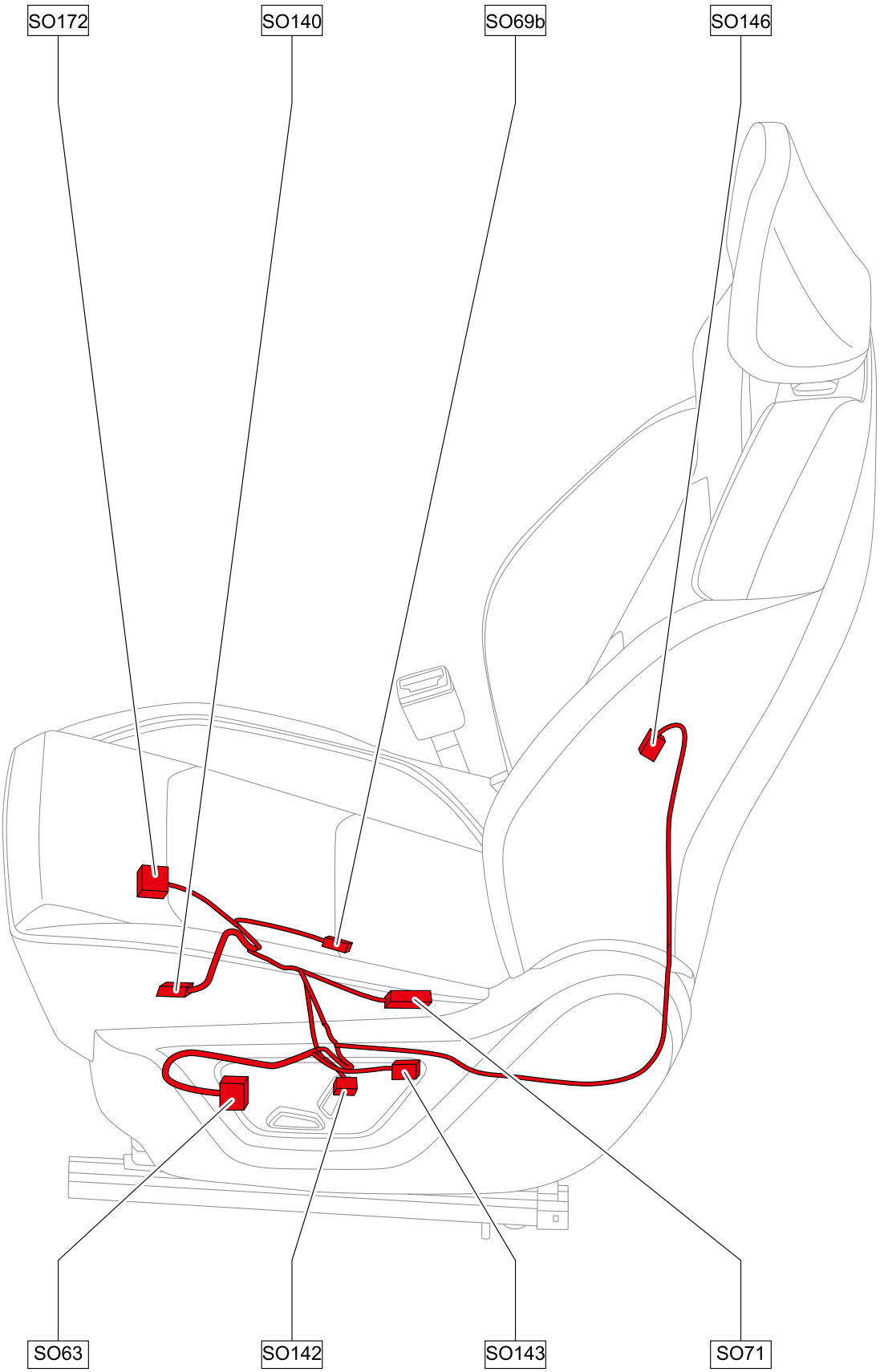

Seat harness connector list

Harness connector	Name	Harness connector	Name
SO63	Driver seat adjustment switch harness connector	SO142	Driver seat rail motor harness connector
SO69b	Driver seat belt buckle sensor harness connector (models with power seat)	SO143	Driver seat lift motor harness connector (driver)
SO71	Driver seat cushion heating harness connector	SO146	Driver seat angle adjustment motor harness connector
SO140	Driver seat harness to floor harness connector	SO172	Seat heating control module harness connector

Seat Harness Terminal Definition

SO63 Driver seat adjustment switch harness connector

Pin	Functions	Note
1	Backward adjustment signal of the seat tilting motor	-
2	Grounding	-
3	Forward adjustment signal of the seat tilting motor	-
4	Backward adjustment signal of the seat forward/backward adjustment motor	-
5	-	-
6	Forward adjustment signal of the seat forward/backward adjustment motor	-
7	-	-
8	Rising adjustment signal of the seat height motor	-
9	Descending adjustment signal of the seat height motor	-
10	Power supply	-

SO69b Driver seat belt buckle sensor harness connector (models with power seat)

Pin	Functions	Note
1	Signal	-
2	Grounding	-

SO71 driver seat cushion heating harness connector

Pin	Functions	Note
1	Heater power supply	-
2	Sensor positive	-
3	Sensor negative	-
4	Grounding	-

SO140 Driver seat harness to floor harness connector

SO142 Driver seat rail motor harness connector

Pin	Functions	Note
1	Forward movement signal	-
2	-	-
3	-	-
4	-	-
5	Backward movement signal	-

SO143 Driver seat lift motor harness connector (driver)

Pin	Functions	Note
1	Descending adjustment signal	-
2	-	-
3	Rising adjustment signal	-
4	-	-

SO146 Driver seat angle adjustment motor harness connector

Pin	Functions	Note
1	Backward movement signal	-
2	-	-
3	-	-
4	-	-
5	Forward movement signal	-

SO172 Seat heating control module harness connector

Pin	Functions	Note
1	-	-
2	Power supply	-
3	Power supply	-
4	-	-
5	Driver seat cushion heating module power supply	-
6	Grounding	-
7	Passenger seat cushion heating module power supply	-
8	-	-
9	-	-
10	-	-
11	-	-
12	Ignition power supply 1	-
13	Grounding	-
14	Driver seat heater module sensor negative	-
15	Passenger seat cushion heating module sensor negative	-
16	-	-
17	-	-
18	-	-
19	Driver seat heater module sensor positive	-
20	Passenger seat cushion heating module sensor positive	-

Pin	Functions	Note
21	IF CAN-H	-
22	IF CAN-L	-

Door harness layout drawing

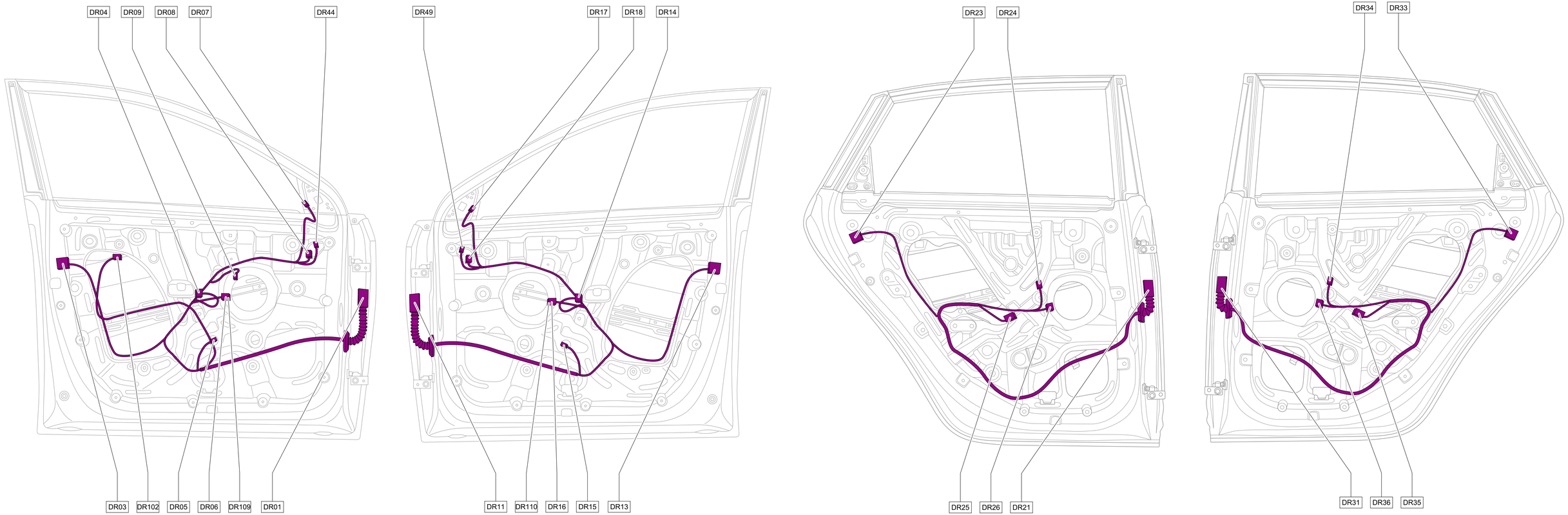

Door harness connector list

Harness connector	Name	Harness connector	Name
DR01	Left front door harness to floor harness connector	DR21	Left rear door harness to floor harness connector
DR03	Left front door lock actuator motor harness connector	DR23	Left rear door lock actuator motor harness connector
DR04	Left front door window regulator switch harness connector	DR24	Left rear door window regulator switch harness connector
DR05	Left front door window regulator motor harness connector	DR25	Left rear door window regulator motor harness connector
DR06	Left front door woofer harness connector	DR26	Left rear door woofer harness connector
DR07	Left front door tweeter harness connector	DR31	Right rear door harness to floor harness connector
DR08	Left outside rearview mirror harness connector	DR33	Right rear door lock actuator motor harness connector
DR09	Outside rearview mirror adjustment switch harness connector	DR34	Right rear door window regulator switch harness connector
DR11	Right front door harness to floor harness connector	DR35	Right rear door window regulator motor harness connector
DR13	Right front door lock actuator motor harness connector	DR36	Right rear door woofer harness connector
DR14	Right front door window regulator switch harness connector	DR44	360 degree panoramic left camera harness connector
DR15	Right front door window regulator motor harness connector	DR49	360 degree panoramic right camera harness connector
DR16	Right front door woofer harness connector	DR102	Left front door antenna harness connector
DR17	Right front door tweeter harness connector	DR109	Left front door full range speaker harness connector
DR18	Right outside rearview mirror harness connector	DR110	Right front door full range speaker harness connector

Door Harness Terminal Definition

DR01 Left front door harness to floor harness connector

DR03 Left front door lock actuator motor harness connector

Pin	Functions	Note
1	Left front courtesy switch signal	-
2	-	-
3	Locking signal	-
4	Unlocking signal	-
5	Grounding	-
6	Left front door lock status signal	-

DR04 Left front door window regulator switch harness connector

Pin	Functions	Note
1	Child safety lock	-
2	Child safety lock lighting	-
3	-	-
4	Front left window glass regulator signal input	-
5	Front left window glass regulator signal output	-
6	Right front window regulator switch lifting signal output	-
7	Right rear window regulator switch lifting signal output	-
8	Left rear window regulator switch lifting signal output	-
9	-	-
10	Window regulator switch (excluding left front door)/Central switch grounding	-
11	Central lock switch signal	-
12	-	-
13	Central door lock locking lighting	-
14	Grounding	-
15	-	-
16	-	-

DR05 Left front door window regulator motor harness connector

Pin	Functions	Note
1	Down signal	-
2	Up signal	-

DR06 Left front door woofer harness connector

Pin	Functions	Note
1	Speaker negative	-
2	-	-
3	-	-
4	Speaker positive	-

DR07 Left front door tweeter harness connector

Pin	Functions	Note
1	Speaker positive	-
2	Speaker negative	-

DR08 Left outside rearview mirror harness connector

Pin	Functions	Note
1	Up-down adjustment of rearview mirrors	-
2	Common terminal for rearview mirror adjustment	-
3	Left-right adjustment of rearview mirrors	-
4	-	-
5	Heating power supply of rearview mirrors	-
6	Turn signal lamp power supply	-
7	Rearview mirror folding signal	-
8	Rearview mirror unfolding signal	-
9	-	-
10	-	-
11	Turn signal lamp/Rearview mirror heating grounding	-
12	-	-

DR09 outside rearview mirror adjustment switch harness connector

Pin	Functions	Note
1	-	-
2	Left and right adjustment of left front exterior rearview mirror	-
3	Up and down adjustment of left front exterior rearview mirror	-

Pin	Functions	Note
4	Left and right adjustment of right front exterior rearview mirror	-
5	Up and down adjustment of right front exterior rearview mirror	-
6	Common terminal for rearview mirror adjustment	-
7	Grounding	-
8	Accessory power supply	-
9	Rearview mirror folding switch signal	-
10	-	-

DR11 Right front door harness to floor harness connector

DR13 Right front door lock actuator motor harness connector

Pin	Functions	Note
1	Right front courtesy switch signal	-
2	-	-
3	Unlocking signal	-
4	Locking signal	-
5	Grounding	-
6	Right front door lock status signal	-

DR14 Right front door window regulator switch harness connector

Pin	Functions	Note
1	-	-
2	-	-
3	Grounding	-
4	Signal	-
5	-	-

DR15 Right front door window regulator motor harness connector

Pin	Functions	Note
1	Down signal	-
2	Up signal	-

DR16 Right front door woofer harness connector

Pin	Functions	Note
1	Speaker negative	-
2	-	-
3	-	-
4	Speaker positive	-

DR17 Right front door tweeter harness connector

Pin	Functions	Note
1	Speaker positive	-
2	Speaker negative	-

DR18 Right outside rearview mirror harness connector

Pin	Functions	Note
1	Up-down adjustment of rearview mirrors	-
2	Common terminal for rearview mirror adjustment	-
3	Left-right adjustment of rearview mirrors	-
4	-	-
5	Heating power supply of rearview mirrors	-
6	Turn signal lamp power supply	-
7	Rearview mirror folding signal	-
8	Rearview mirror unfolding signal	-
9	-	-
10	-	-
11	Turn signal lamp/Rearview mirror heating grounding	-
12	-	-

DR21 Left rear door harness to floor harness connector

DR23 Left rear door lock actuator motor harness connector

Pin	Functions	Note
1	RL door control switch signal	-
2	-	-
3	Locking signal	-
4	Unlocking signal	-
5	Grounding	-
6	Left rear door lock status signal	-

DR24 Left rear door window regulator switch harness connector

Pin	Functions	Note
1	-	-
2	-	-
3	Grounding	-
4	Signal	-
5	-	-

DR25 Left rear door window regulator motor harness connector

Pin	Functions	Note
1	Down signal	-
2	Up signal	-

DR26 Left rear door woofer harness connector

Pin	Functions	Note
1	Speaker negative	-
2	-	-
3	-	-
4	Speaker positive	-

DR31 Right rear door harness to floor harness connector

DR33 Right rear door lock actuator motor harness connector

Pin	Functions	Note
1	RR door control switch signal	-
2	-	-
3	Unlocking signal	-
4	Locking signal	-
5	Grounding	-
6	Right rear door lock status signal	-

DR34 Right rear door window regulator switch harness connector

Pin	Functions	Note
1	-	-
2	-	-
3	Grounding	-
4	Signal	-
5	-	-

DR35 Right rear door window regulator motor harness connector

Pin	Functions	Note
1	Down signal	-
2	Up signal	-

DR36 Right rear door woofer harness connector

Pin	Functions	Note
1	Speaker negative	-
2	-	-
3	-	-
4	Speaker positive	-

DR44 360 degree panoramic left camera harness connector

Pin	Functions	Note
1	360 degree panoramic left camera signal	-
1S	360 degree panoramic left camera grounding	-

DR49 360 degree panoramic right camera harness connector

Pin	Functions	Note
1	360 degree panoramic right camera signal	-
1S	360 degree panoramic right camera grounding	-

DR102 Left front door antenna harness connector

Pin	Functions	Note
1	Left front door handle lock sensor	-
2	Grounding	-
3	Antenna positive	-
4	Antenna negative	-

DR109 Left front door full range speaker harness connector

Pin	Functions	Note
1	Speaker negative	-
2	-	-
3	-	-
4	Speaker positive	-

DR110 Right front door full range speaker harness connector

13.2.12 Door harness

Pin	Functions	Note
1	Speaker negative	-
2	-	-
3	-	-
4	Speaker positive	-

Battery negative harness grounding

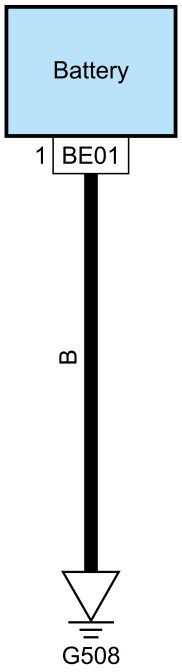

Engine compartment harness grounding

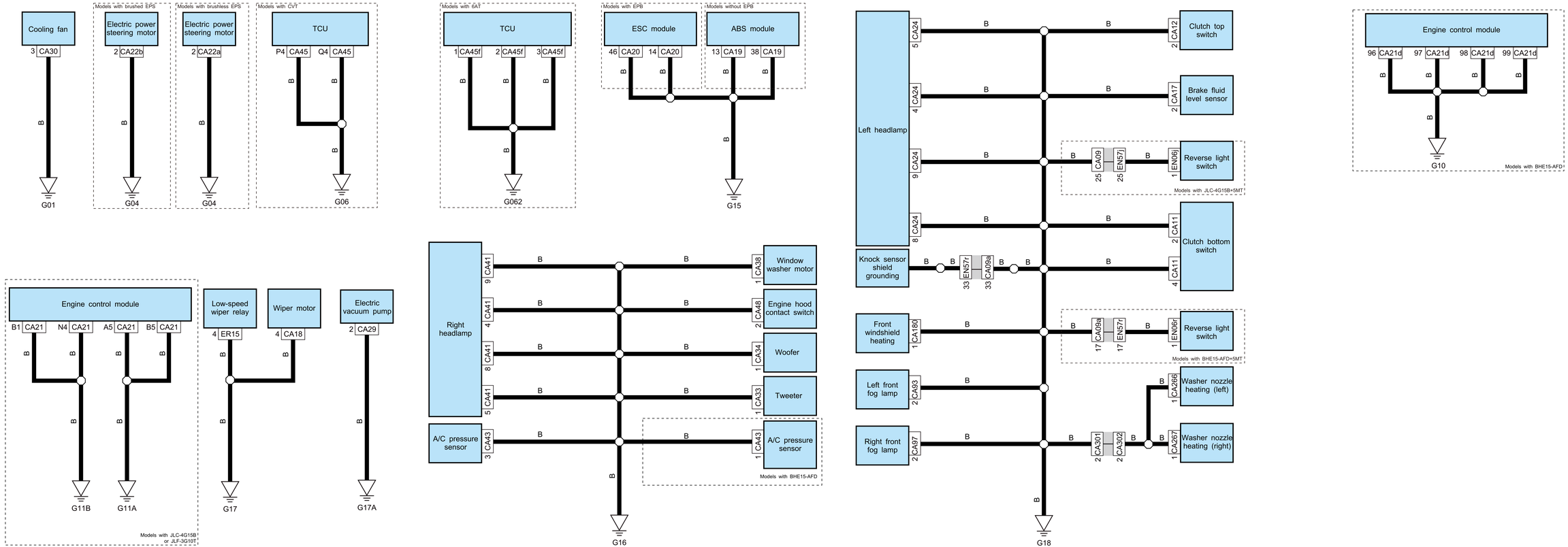

Engine harness grounding

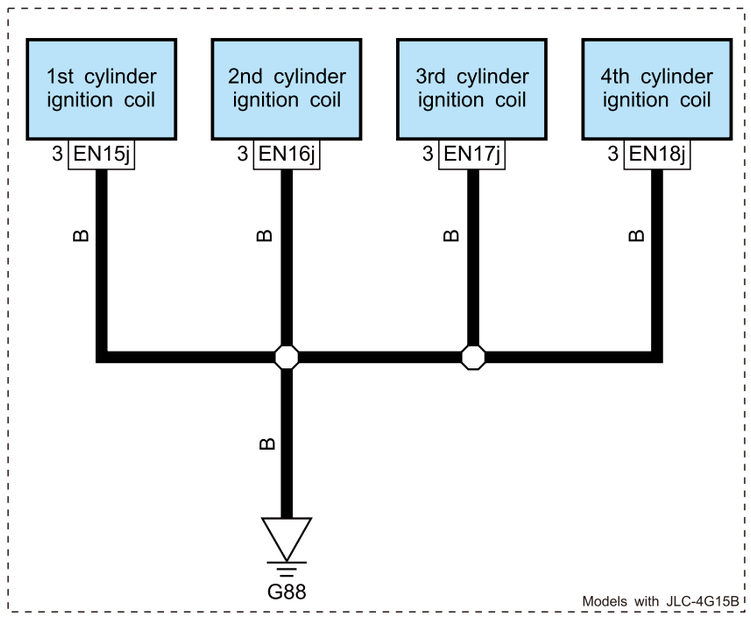

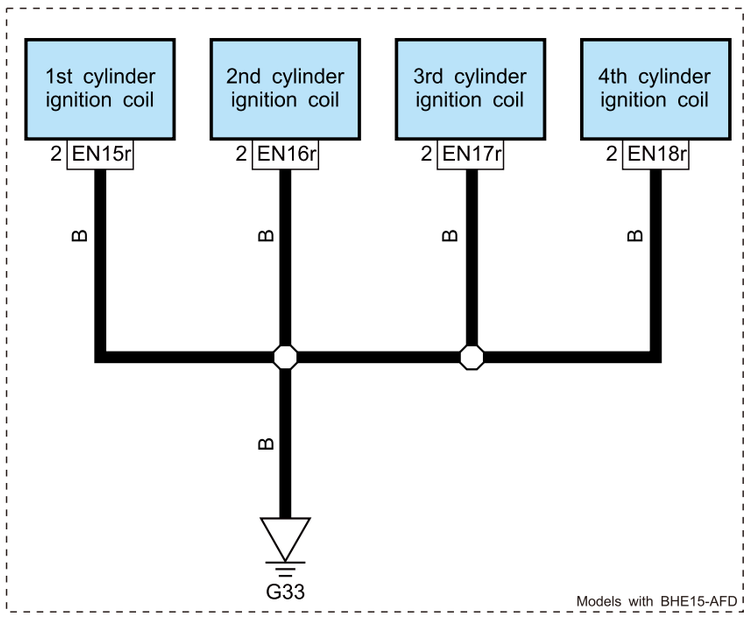

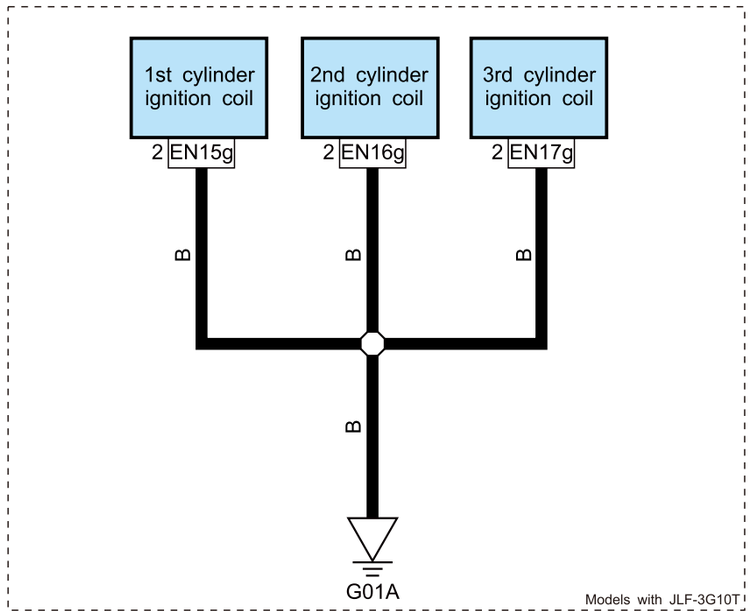

Instrument harness grounding

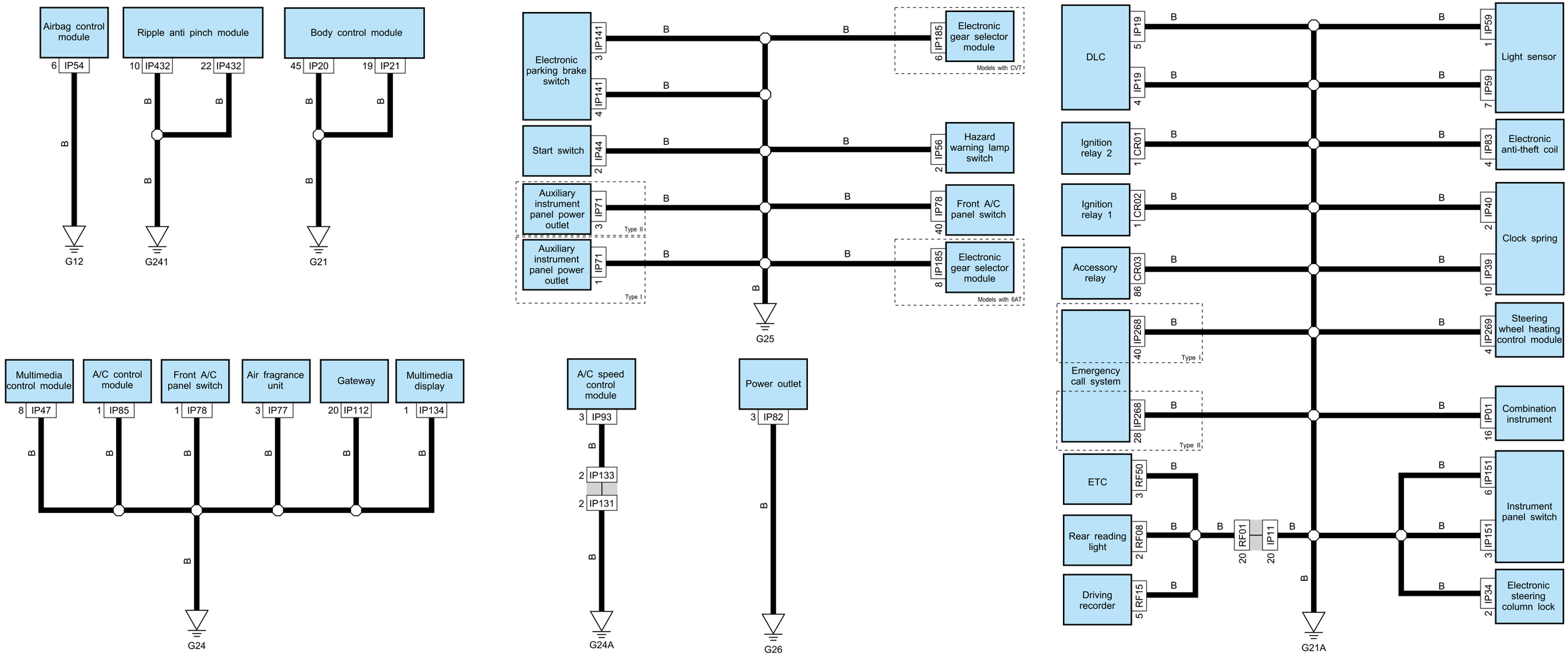

Roof harness grounding

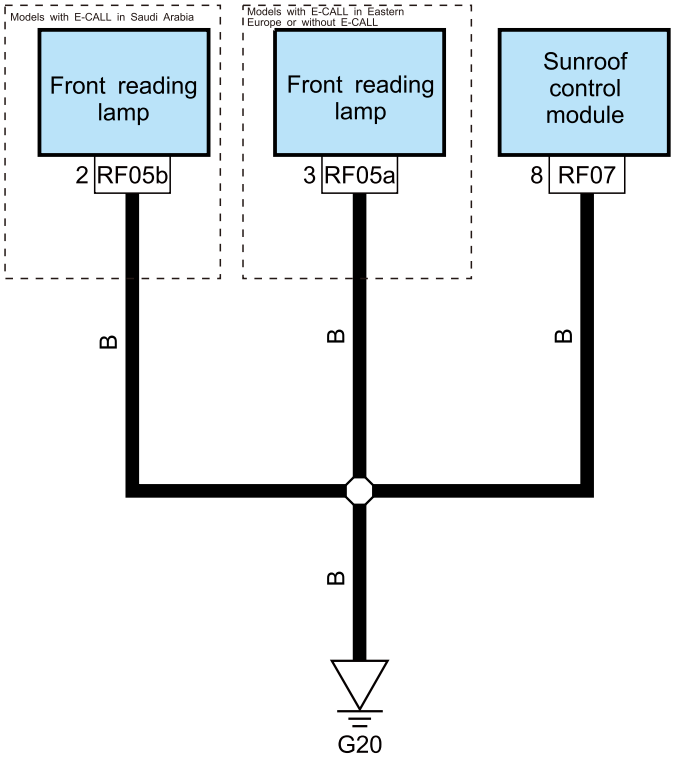

Floor harness grounding

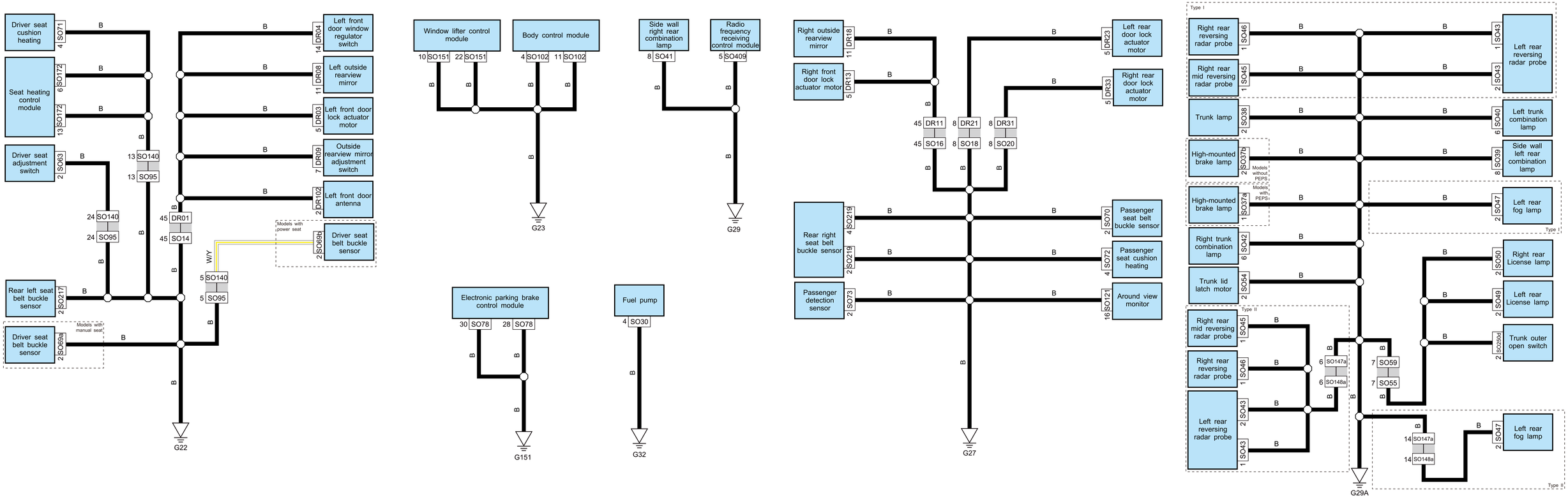

CX-5 Ford engine compartment power supply layout

Frontrunner compartment power supply layout

Under compartment - left

Under compartment - right

Battery
Battery
Fuse box
Fuse box
Fuse box

Indoor power supply layout

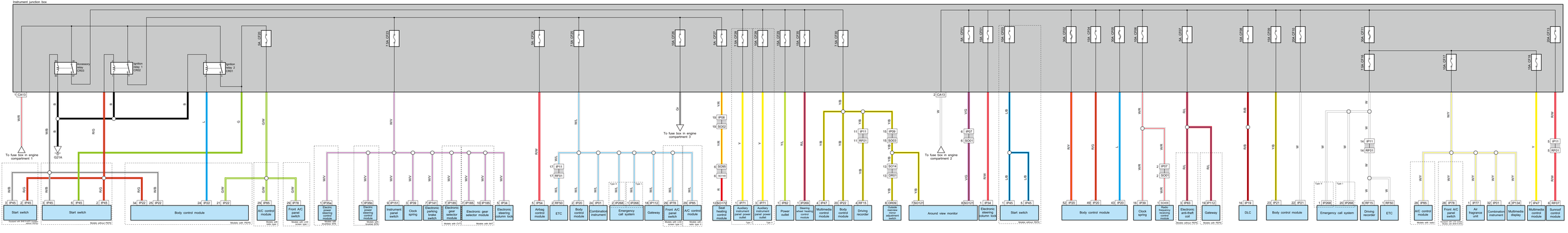

Battery positive power supply layout

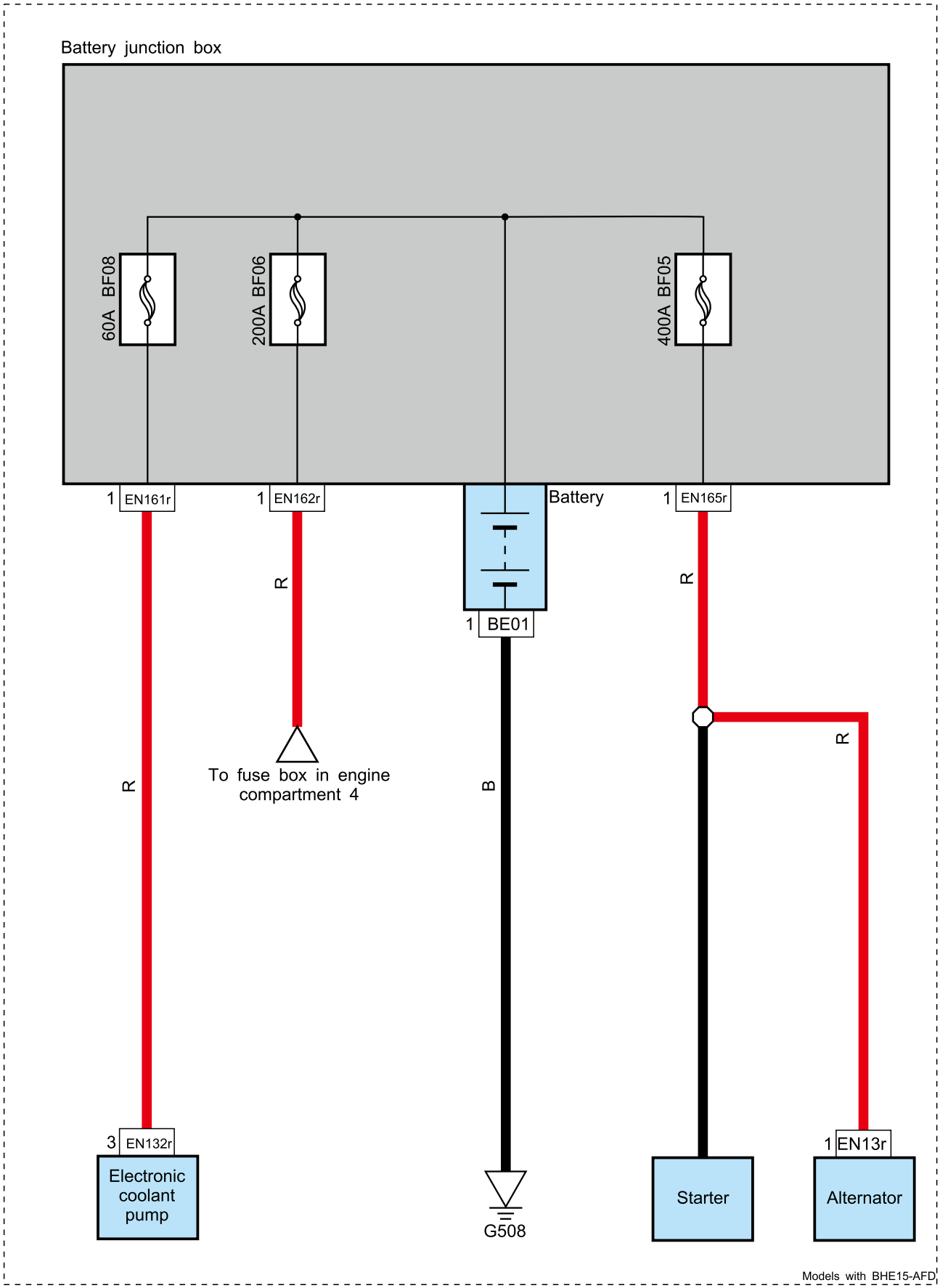

Starting system (JLC-4G15B+5MT)

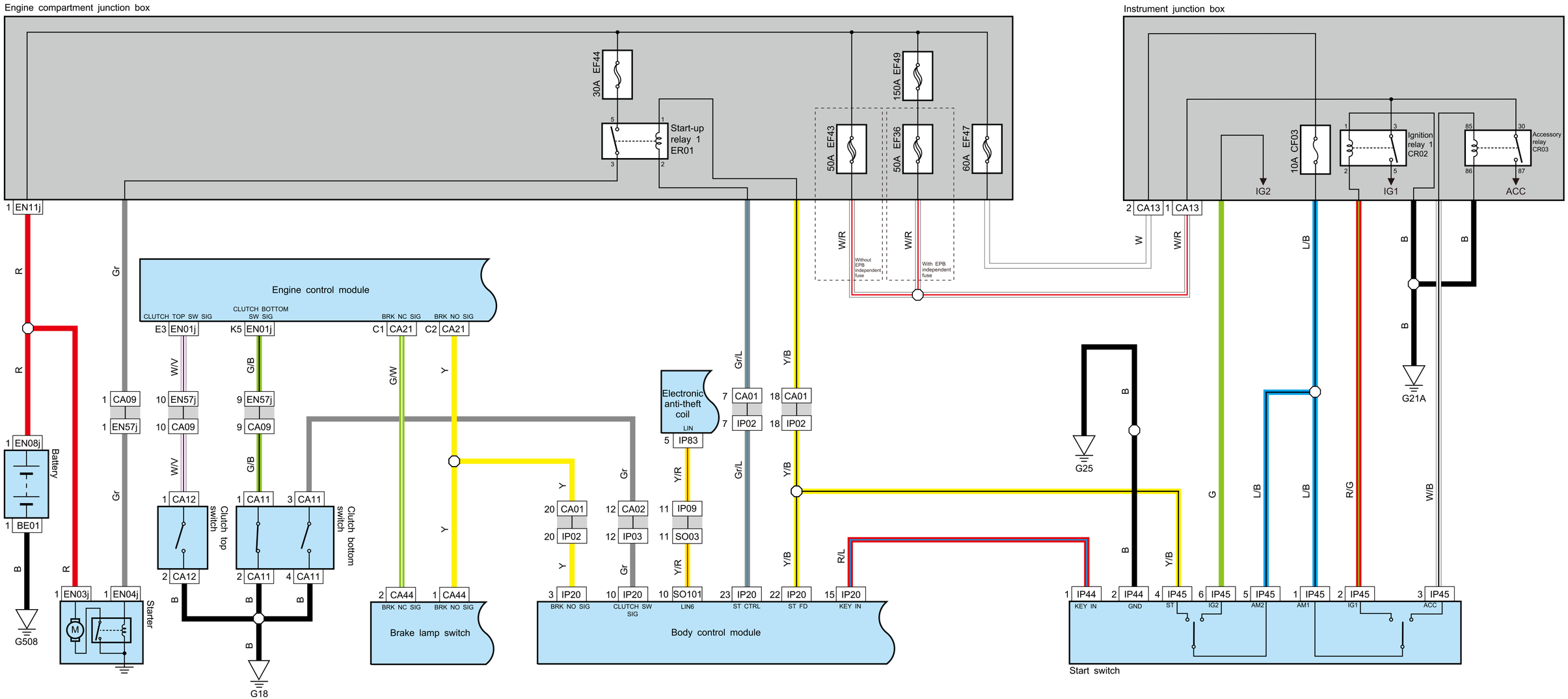

Starting system (JLC-4G15B+CVT)

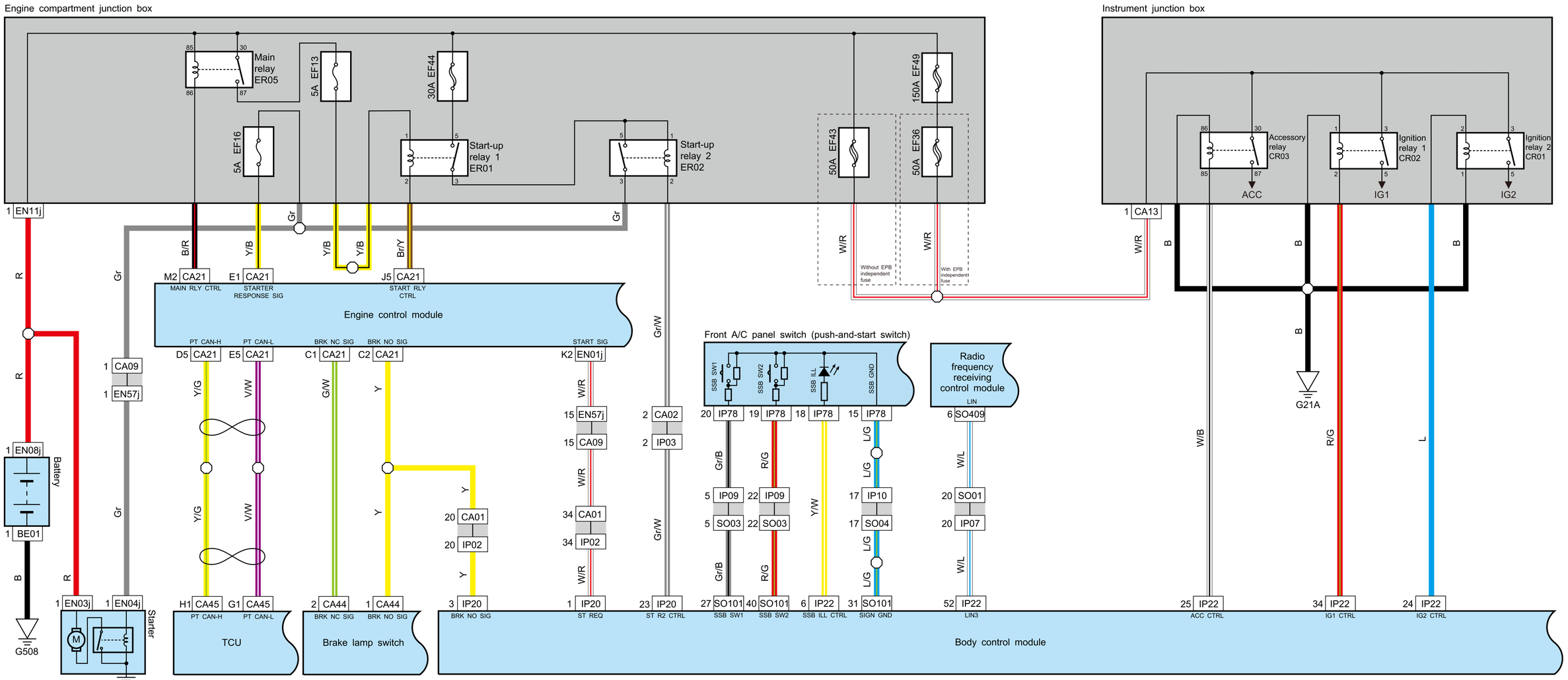

Starting system (JLF-3G10T)

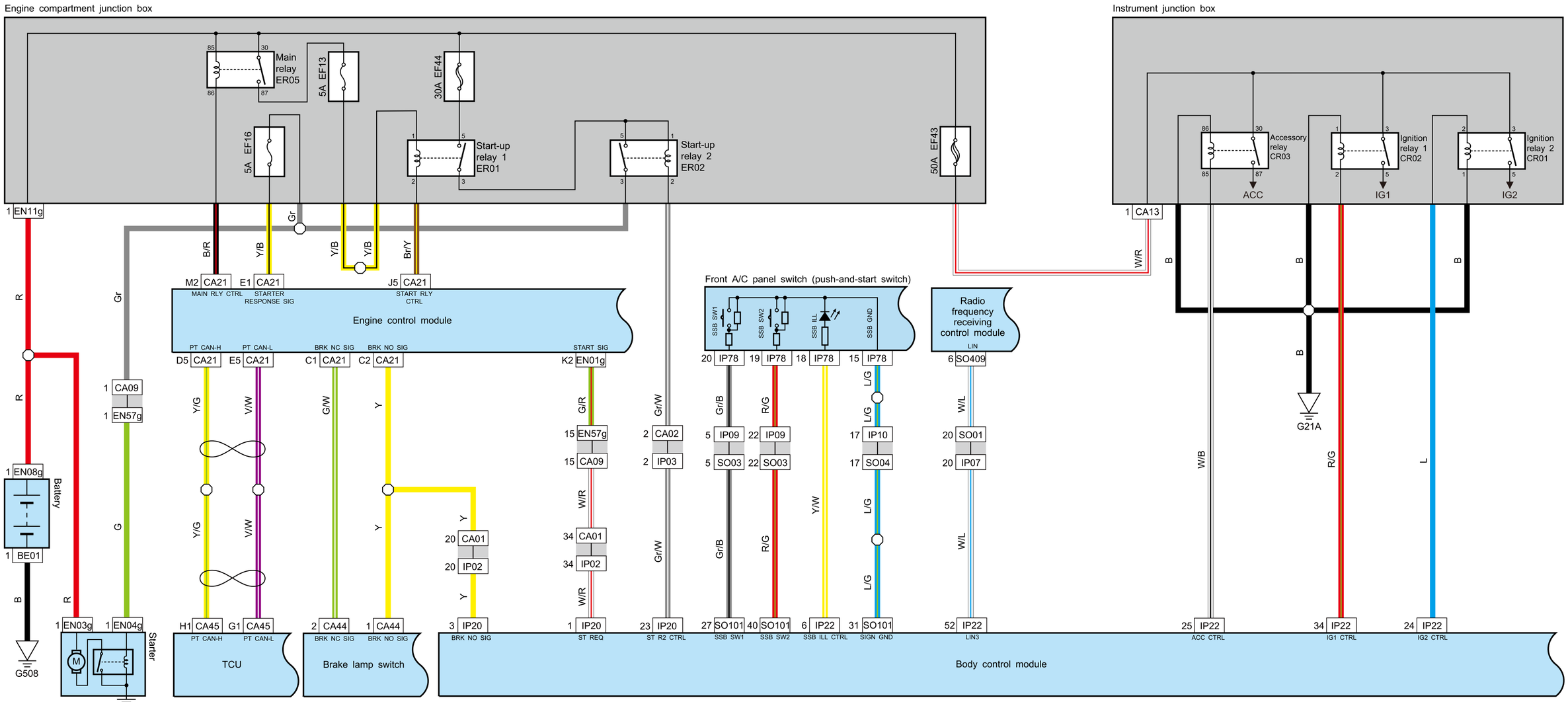

Starting system (BHE15-AFD) (equipped with PEPS)

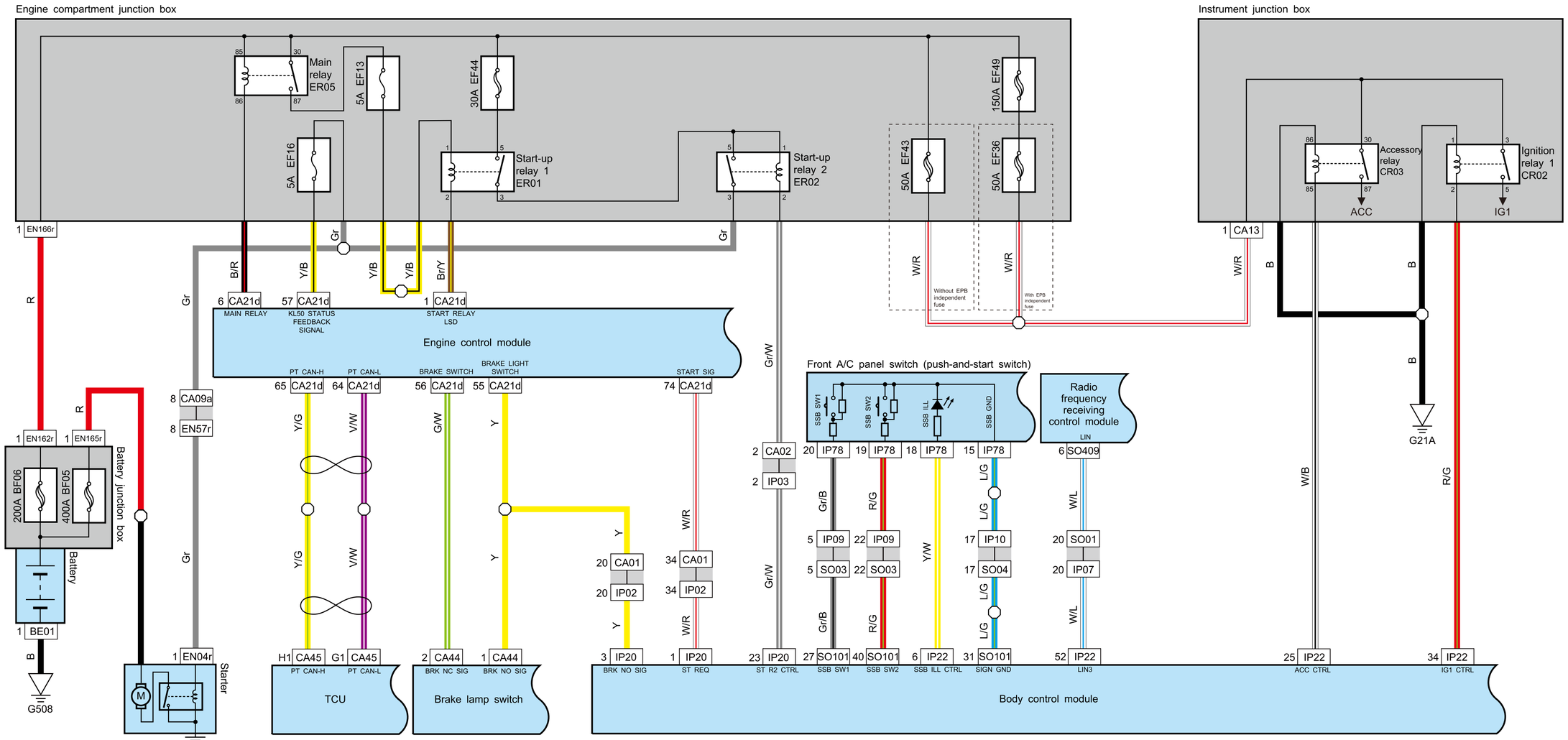

Starting system (BHE15-AFD) (without PEPS)

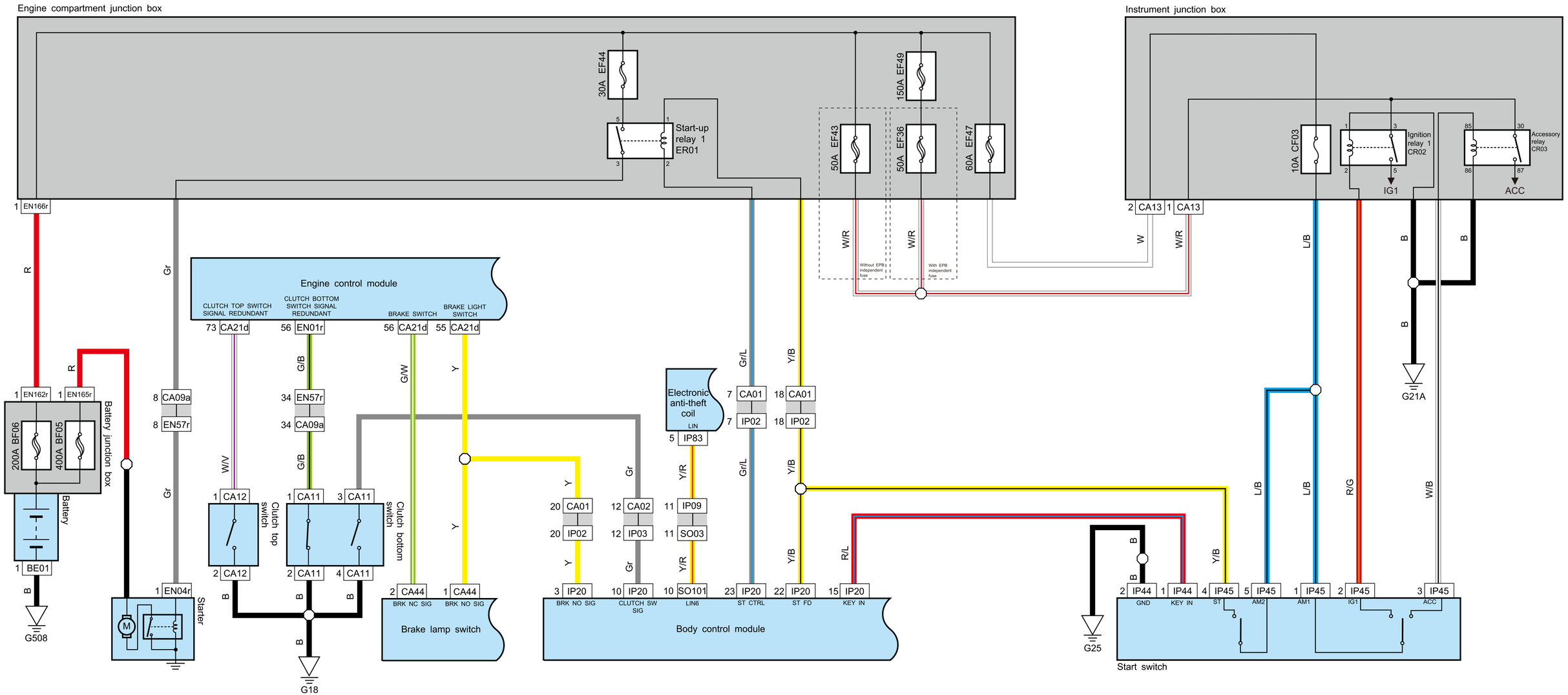

Charging system (JLC-4G15B)

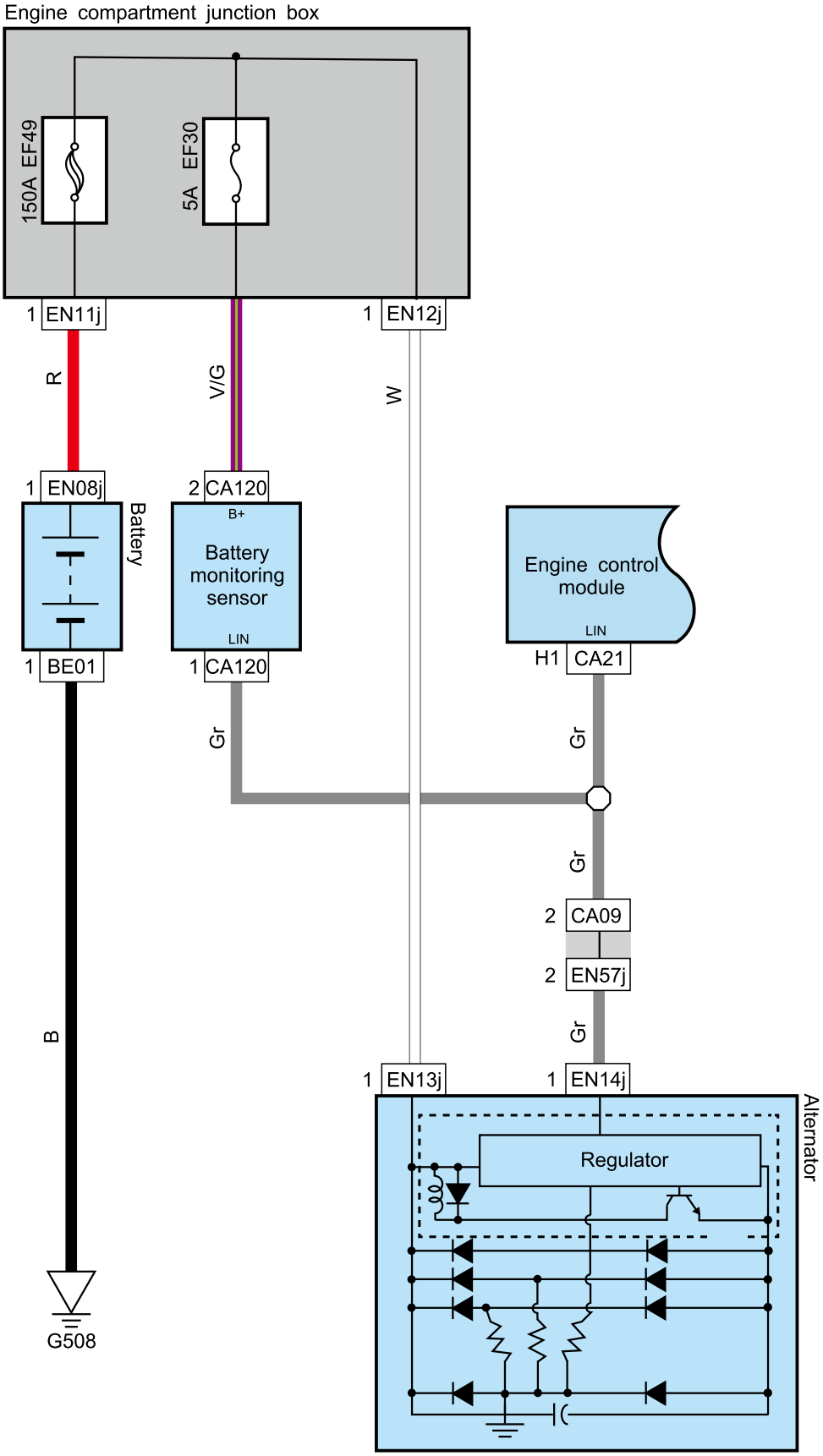

Charging system (JLF-3G10T)

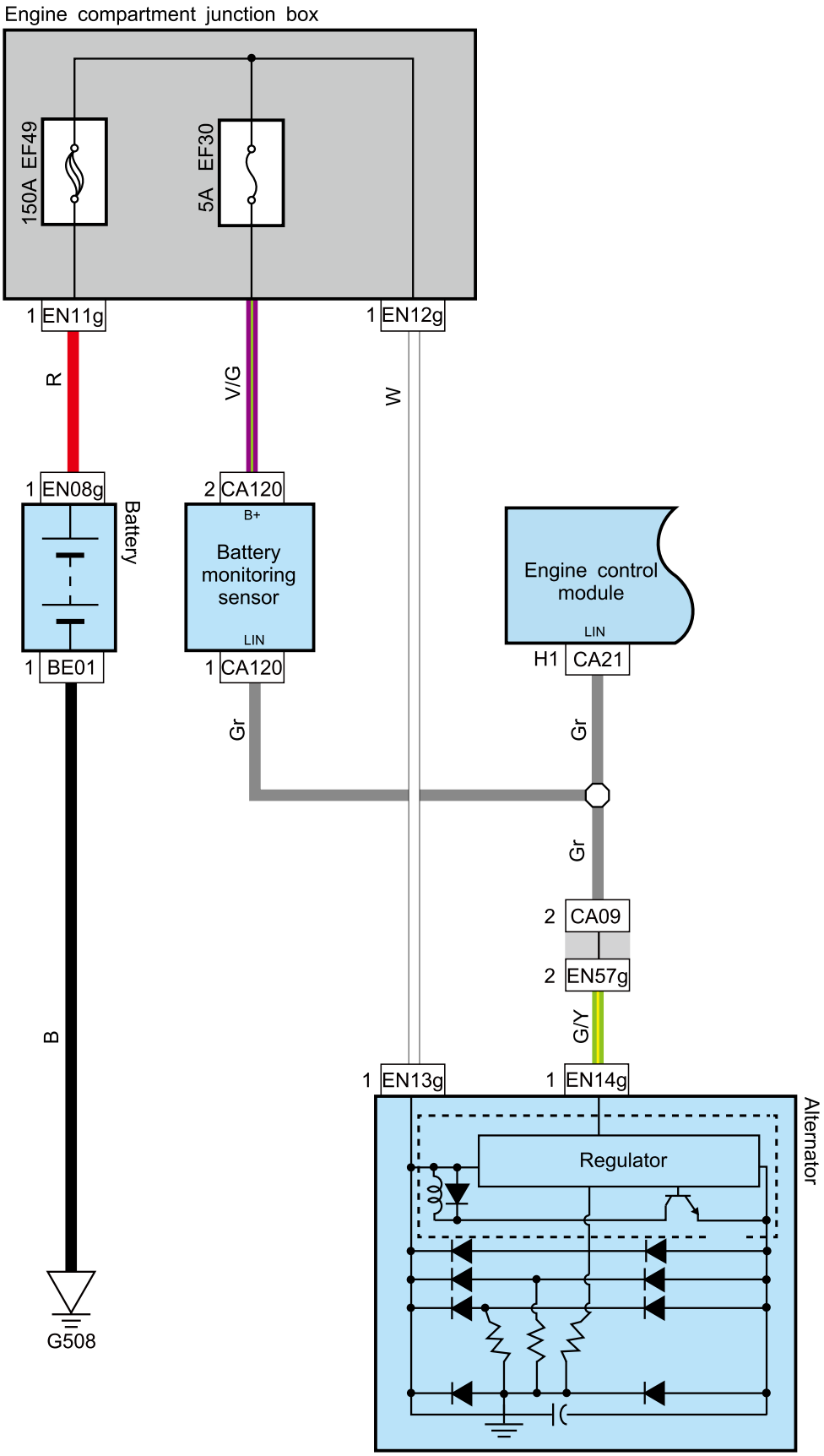

Charging system (BHE15-AFD)

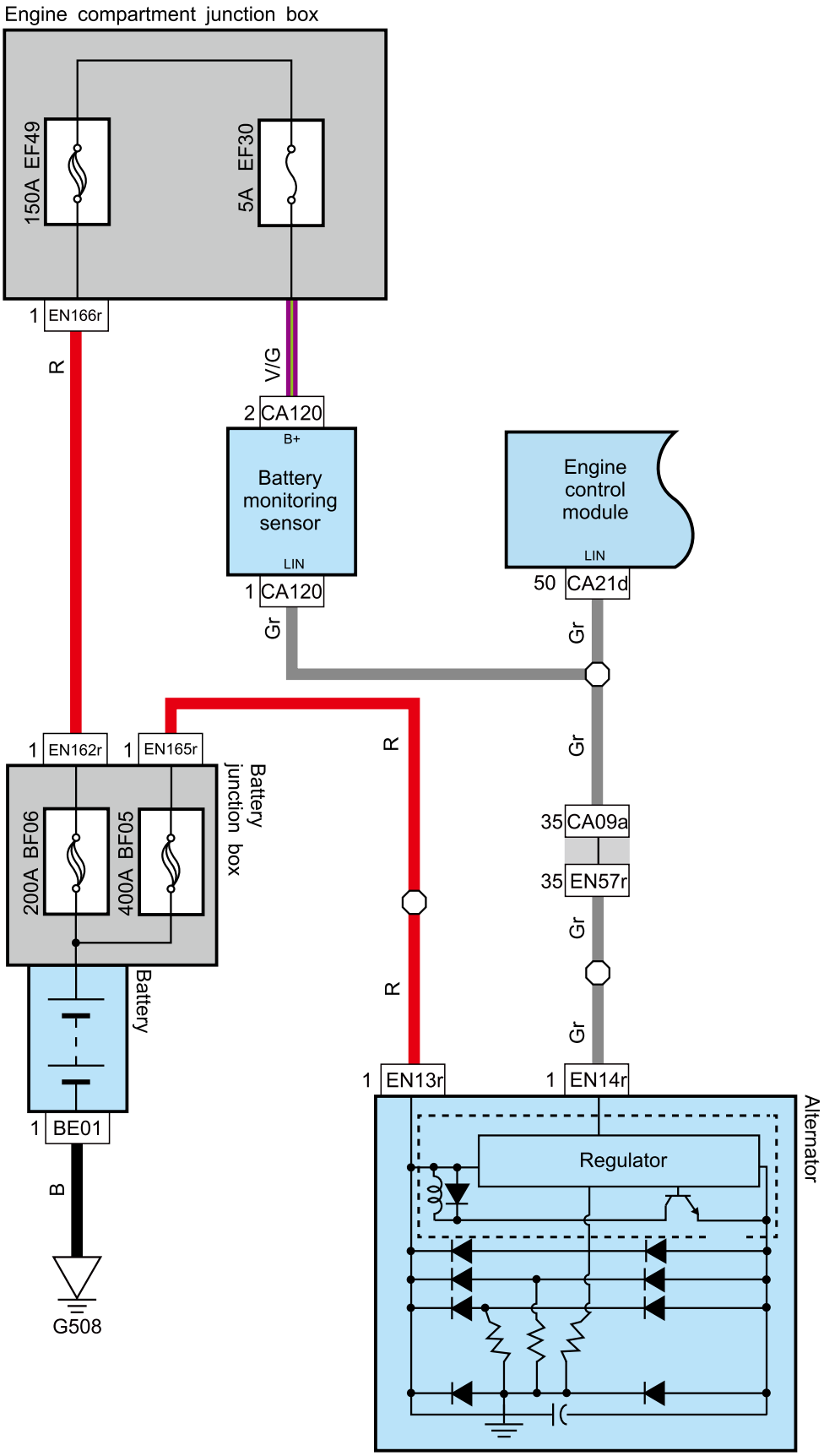

Engine control (JLC-4G15B)

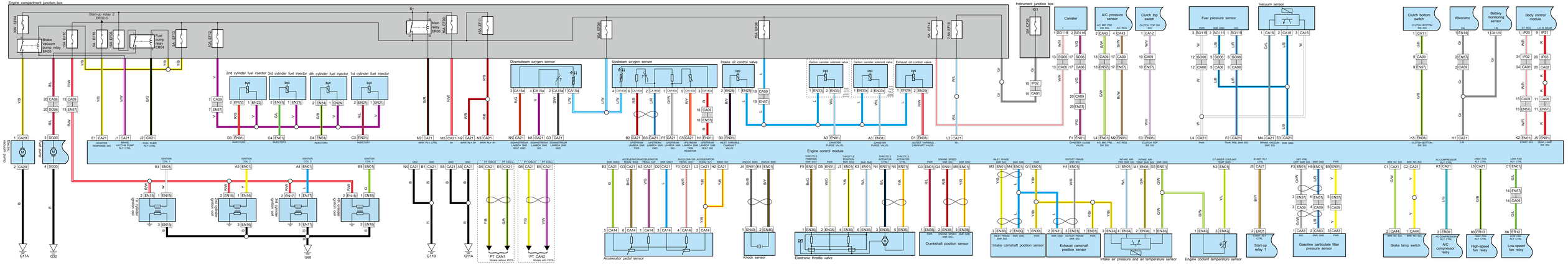

Engine control (JLF-3G10T)

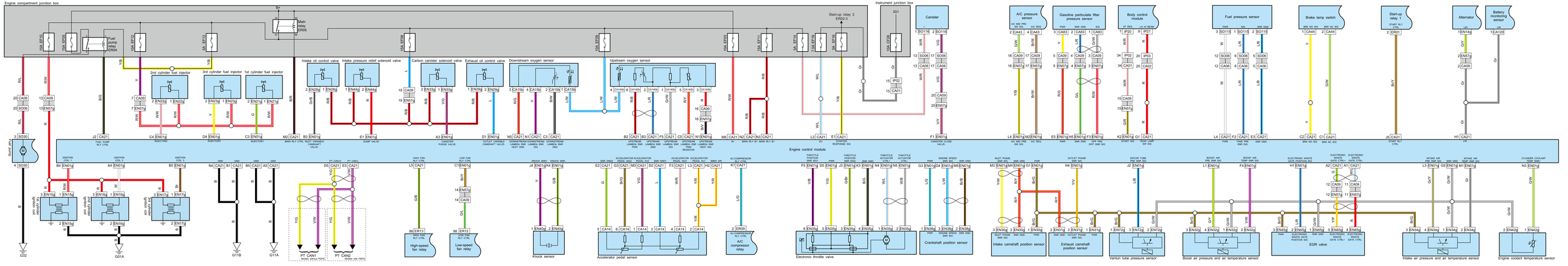

Engine control (BHE15-AFD)

Cooling fan control (JLC-4G15B)

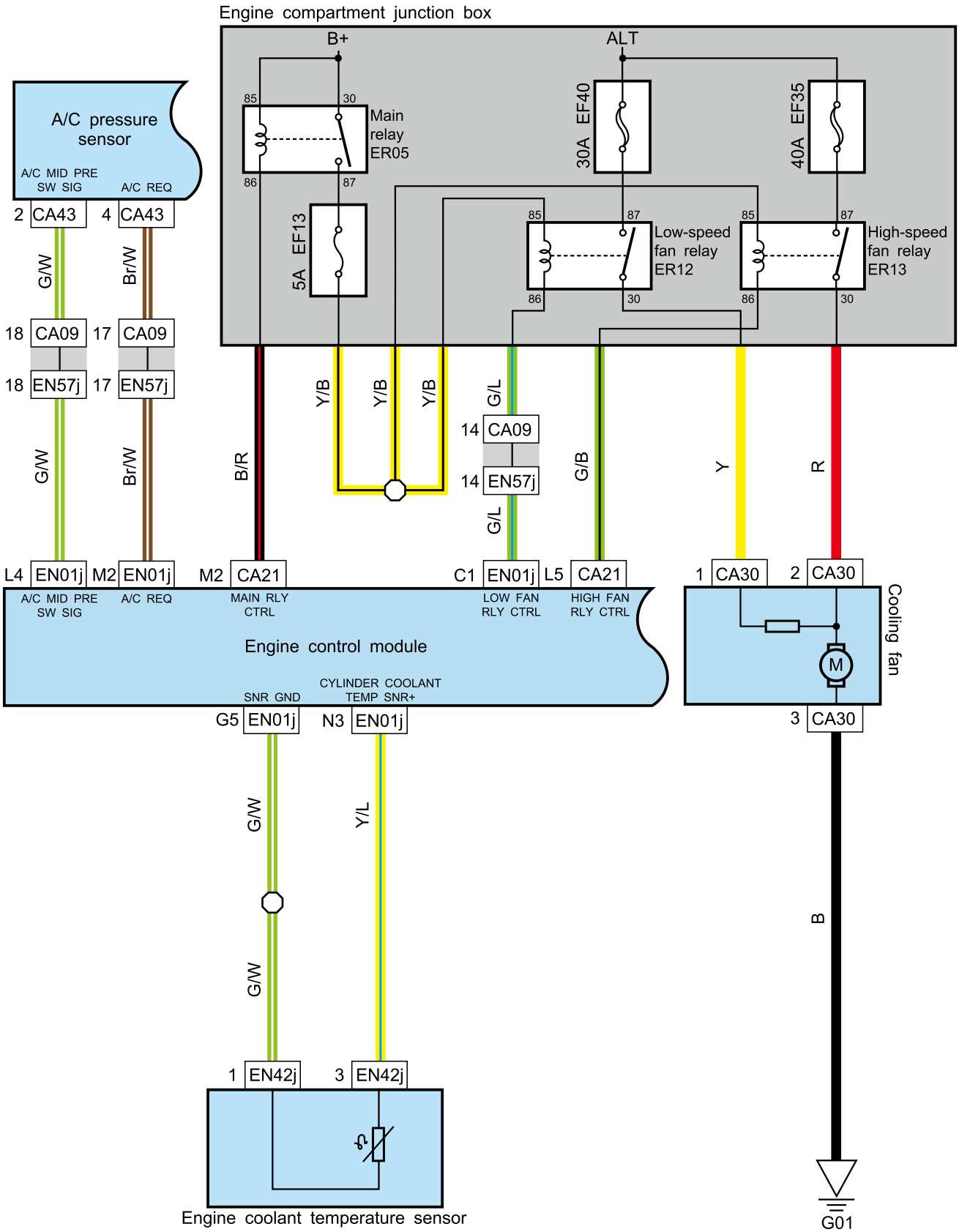

Cooling fan control (JLF-3G10T)

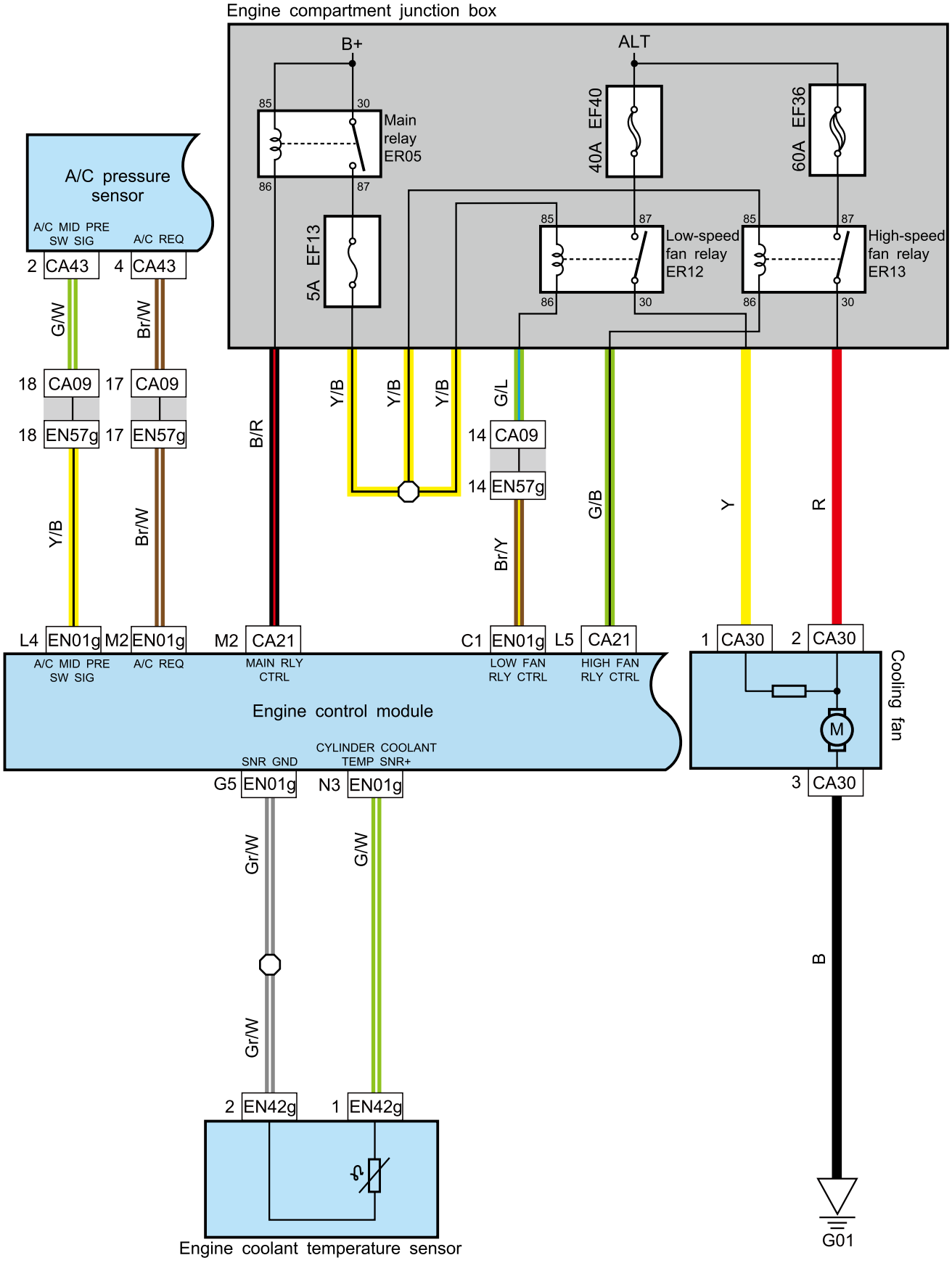

Cooling fan control (BHE15-AFD)

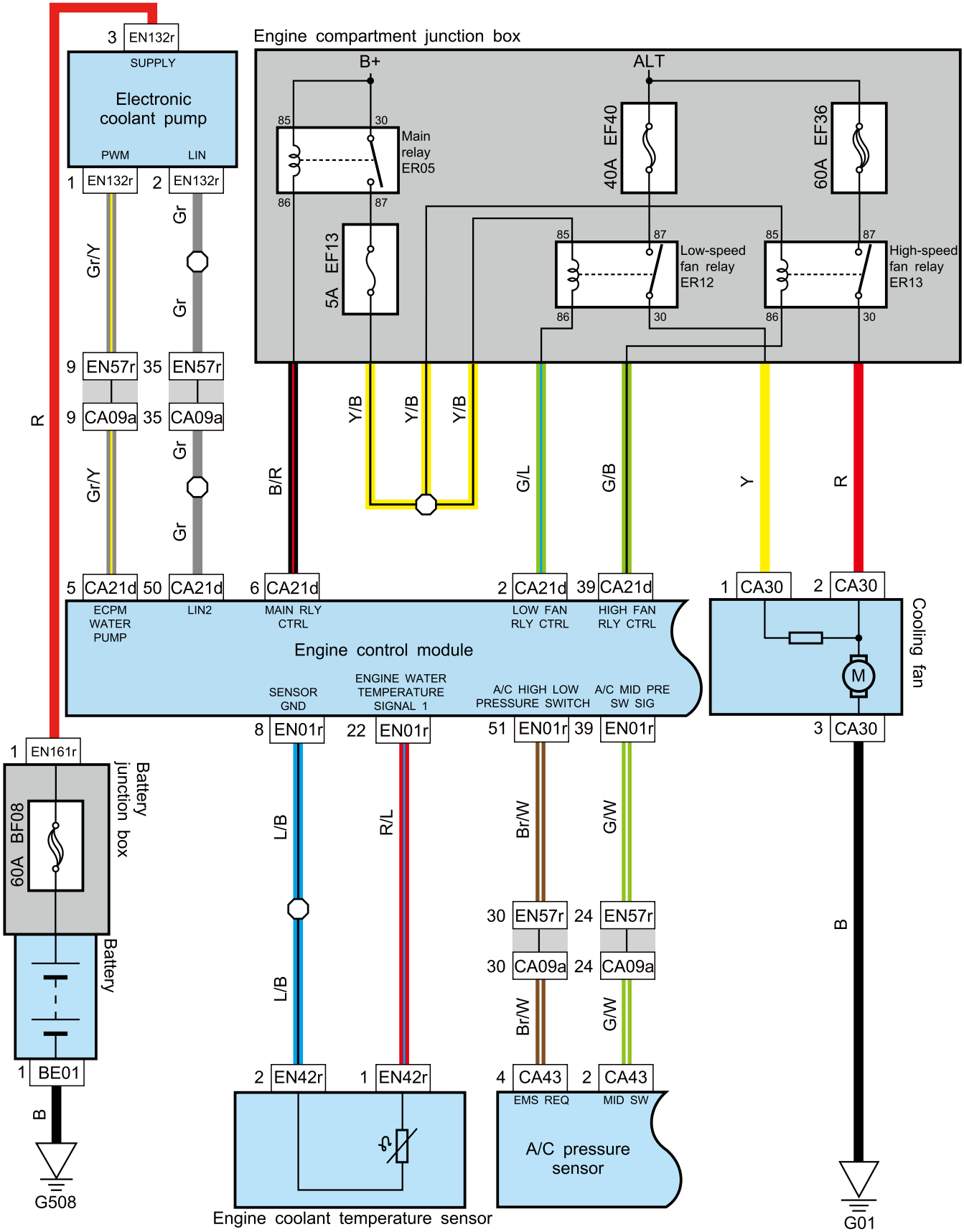

Cruise control

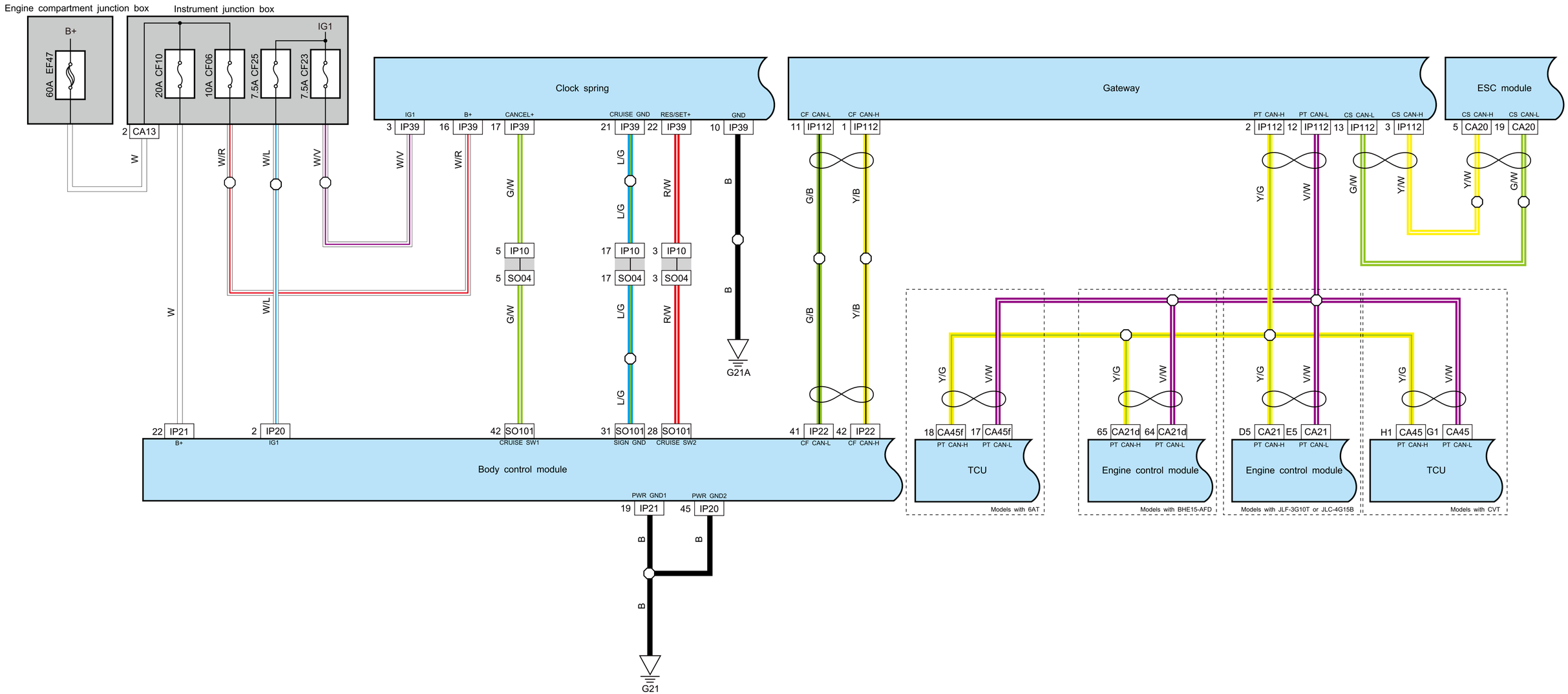

Transmission control (models with CVT)

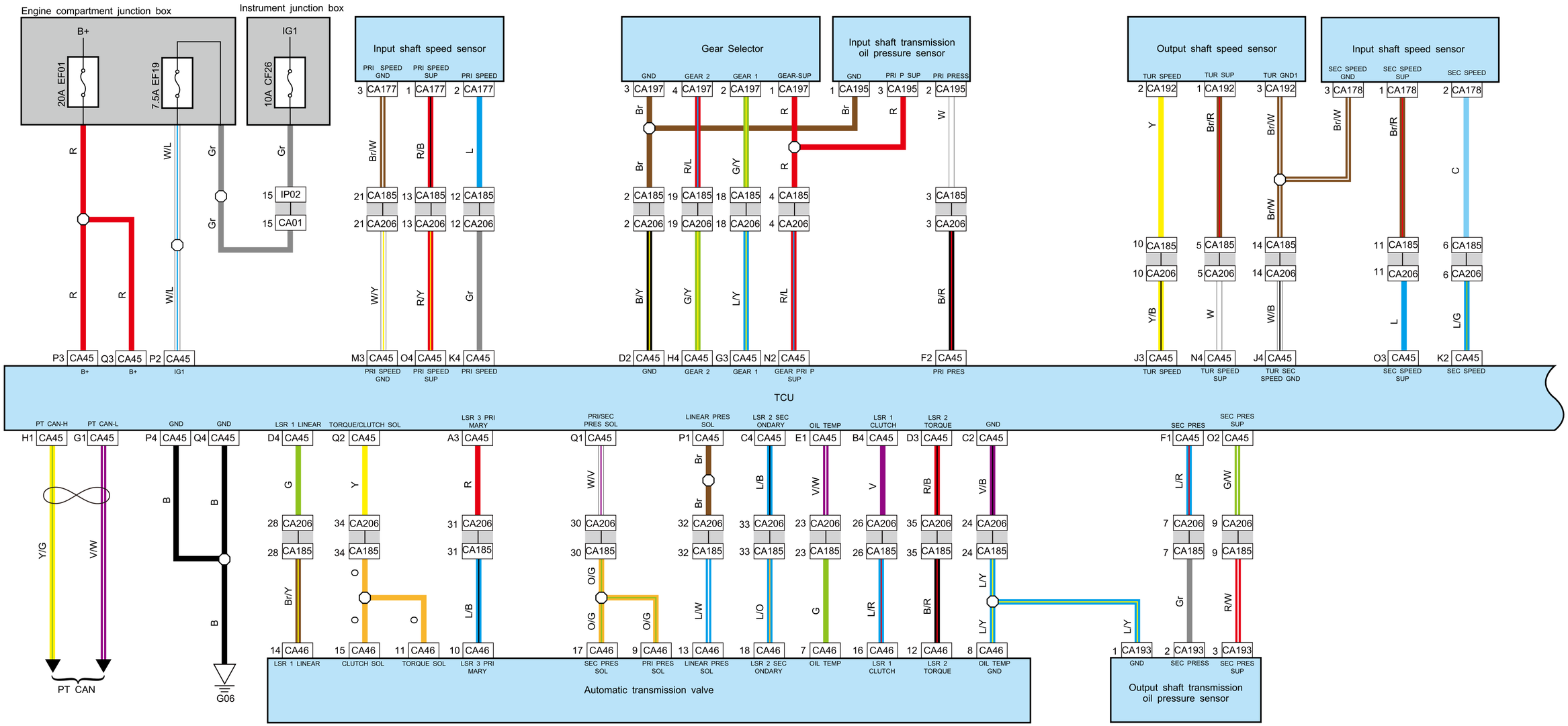

Transmission control (models with 6AT)

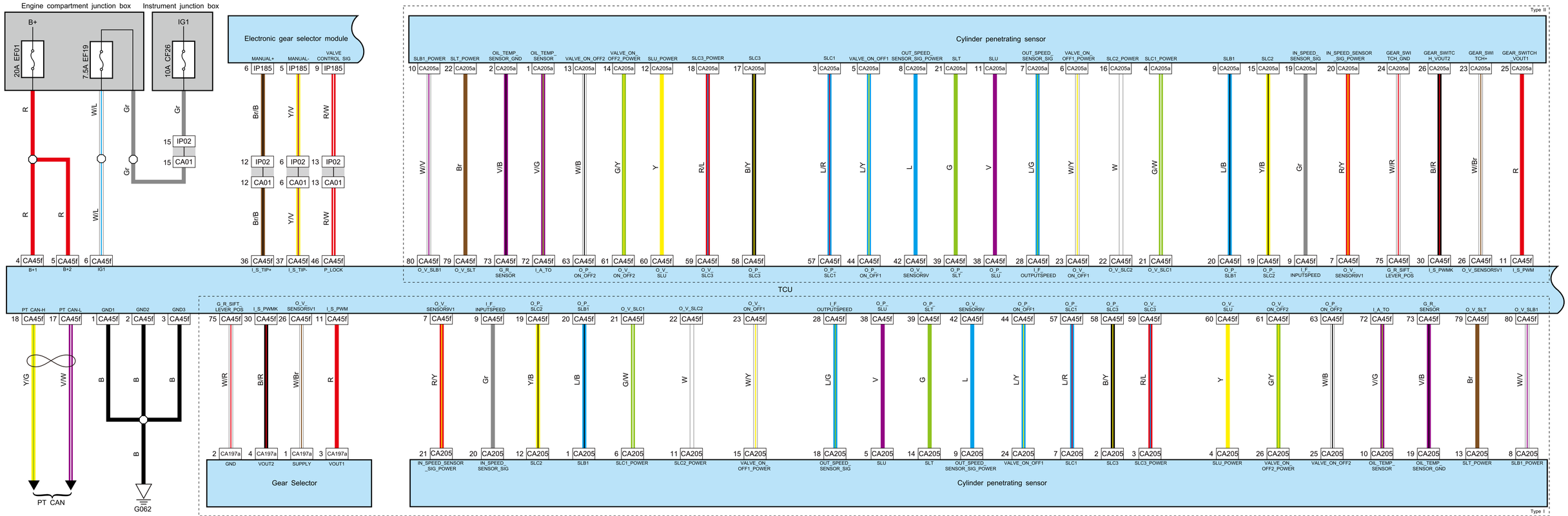

Electronic gear selector module (models with CVT)

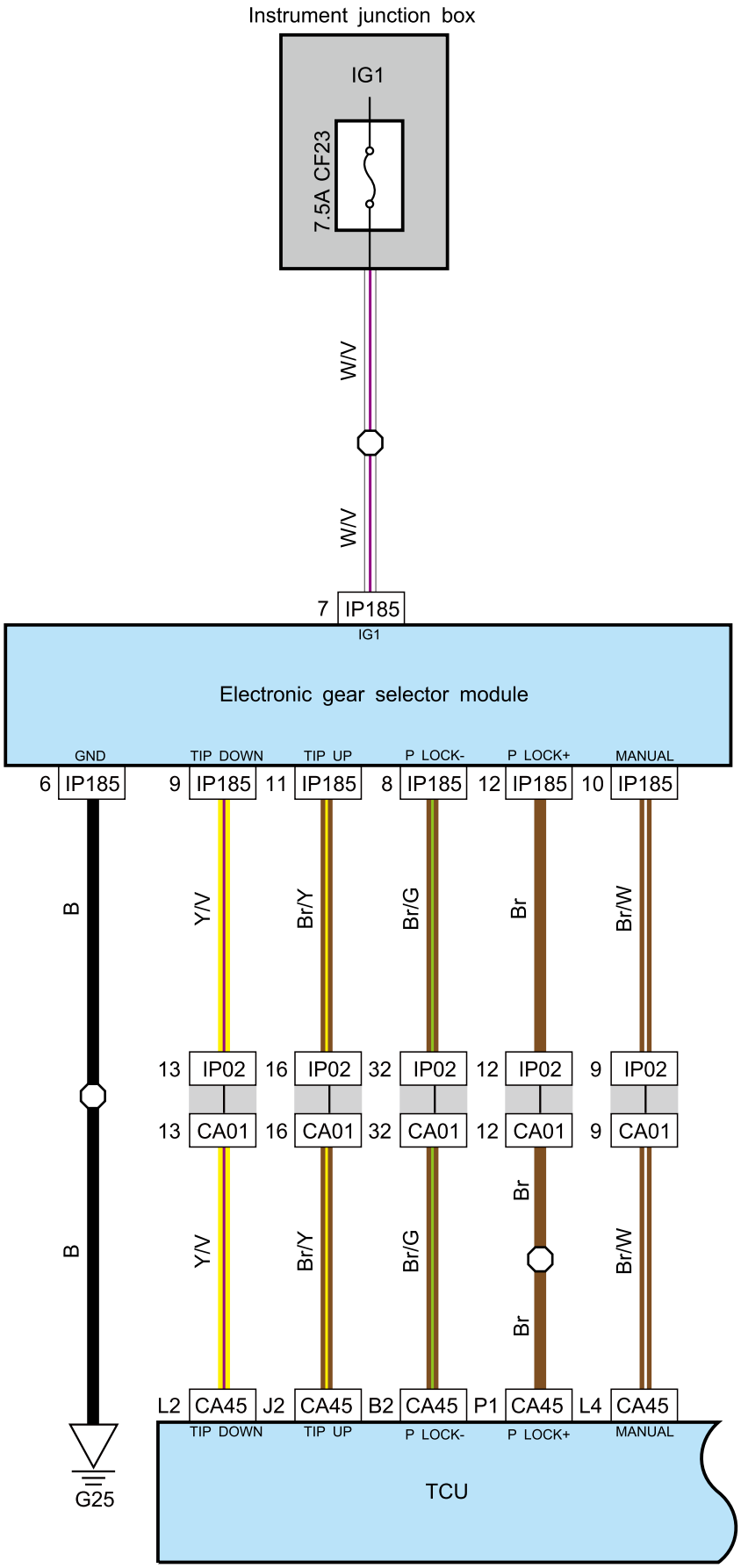

Electronic gear selector module (models with 6AT)

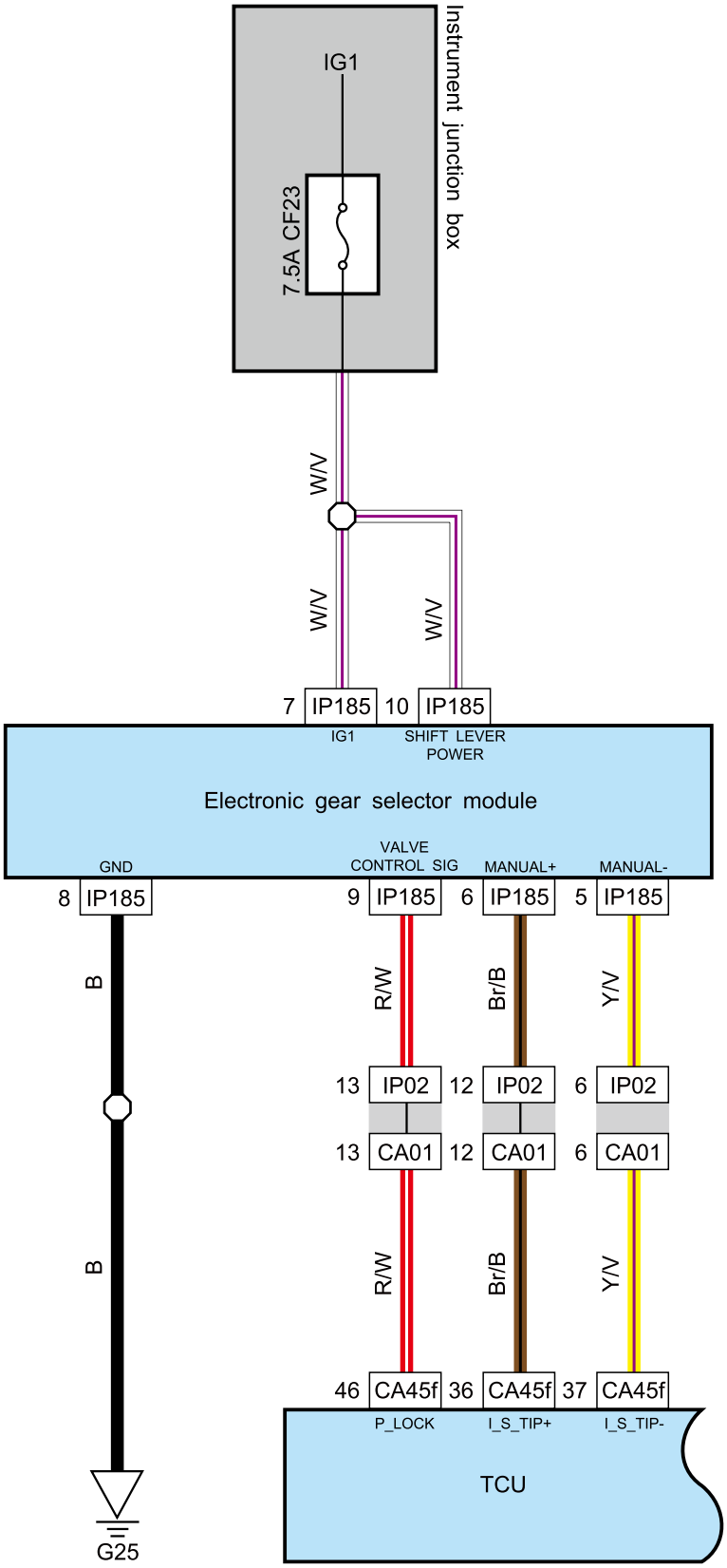

Drive mode switch

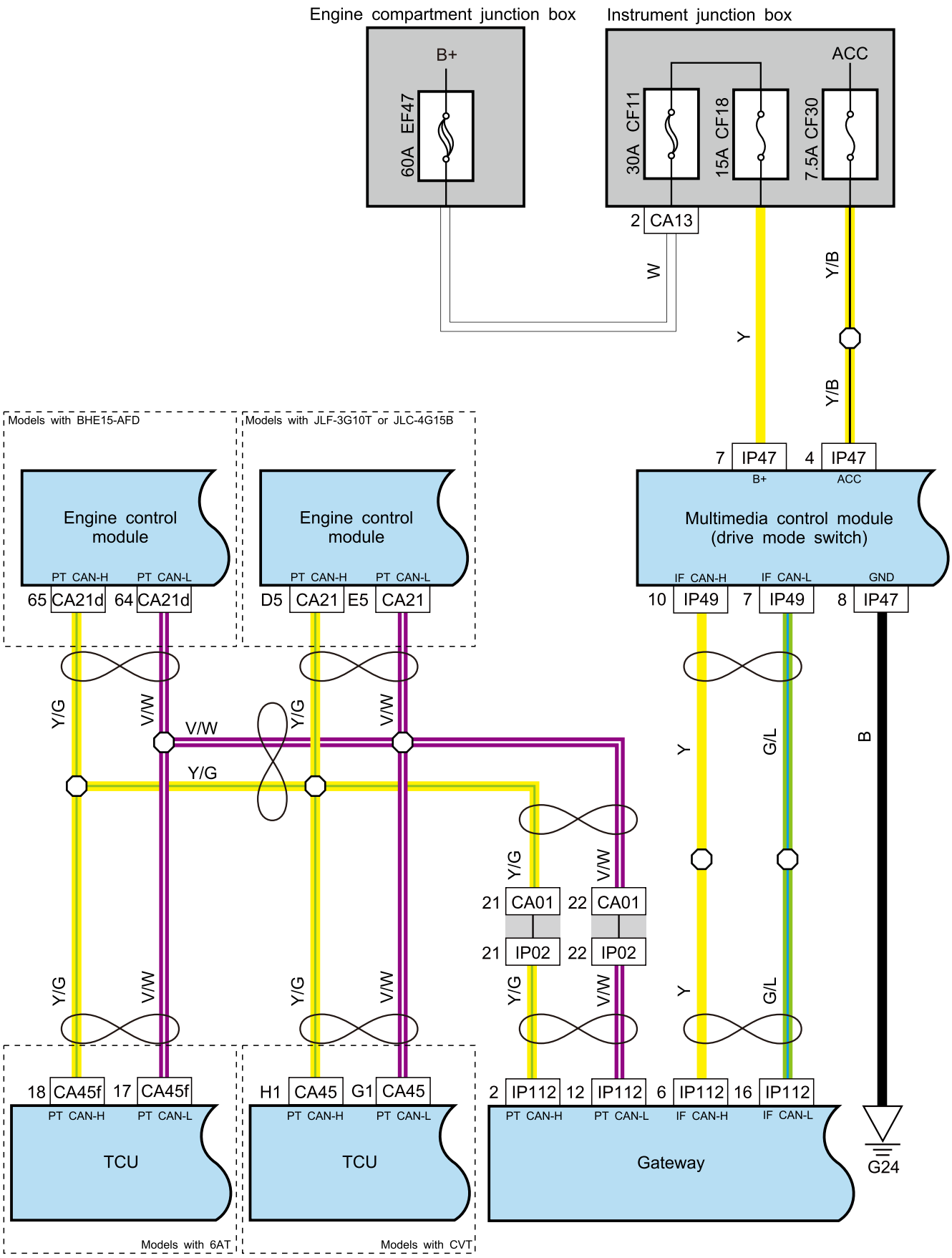

Combination instrument

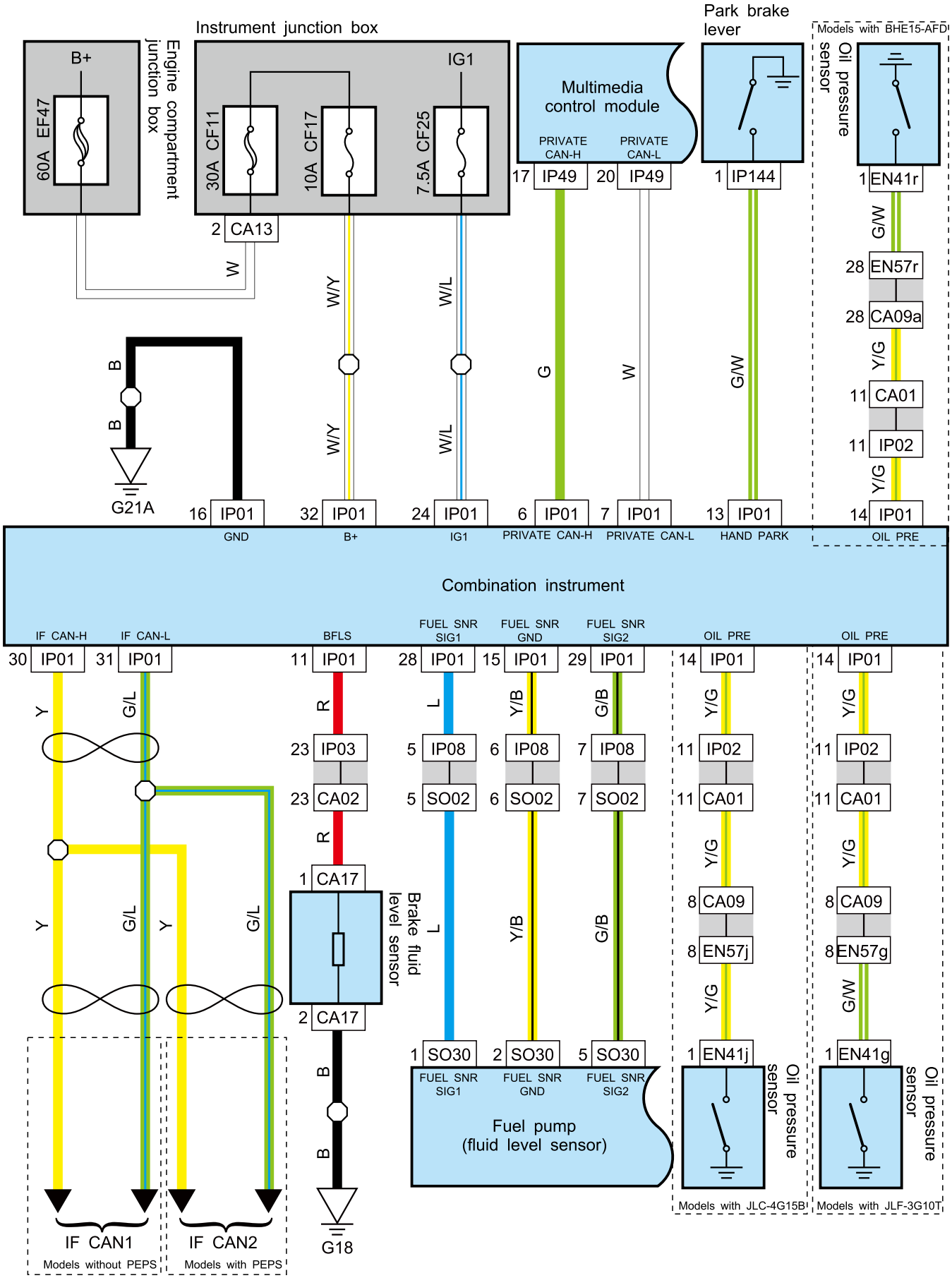

PEPS

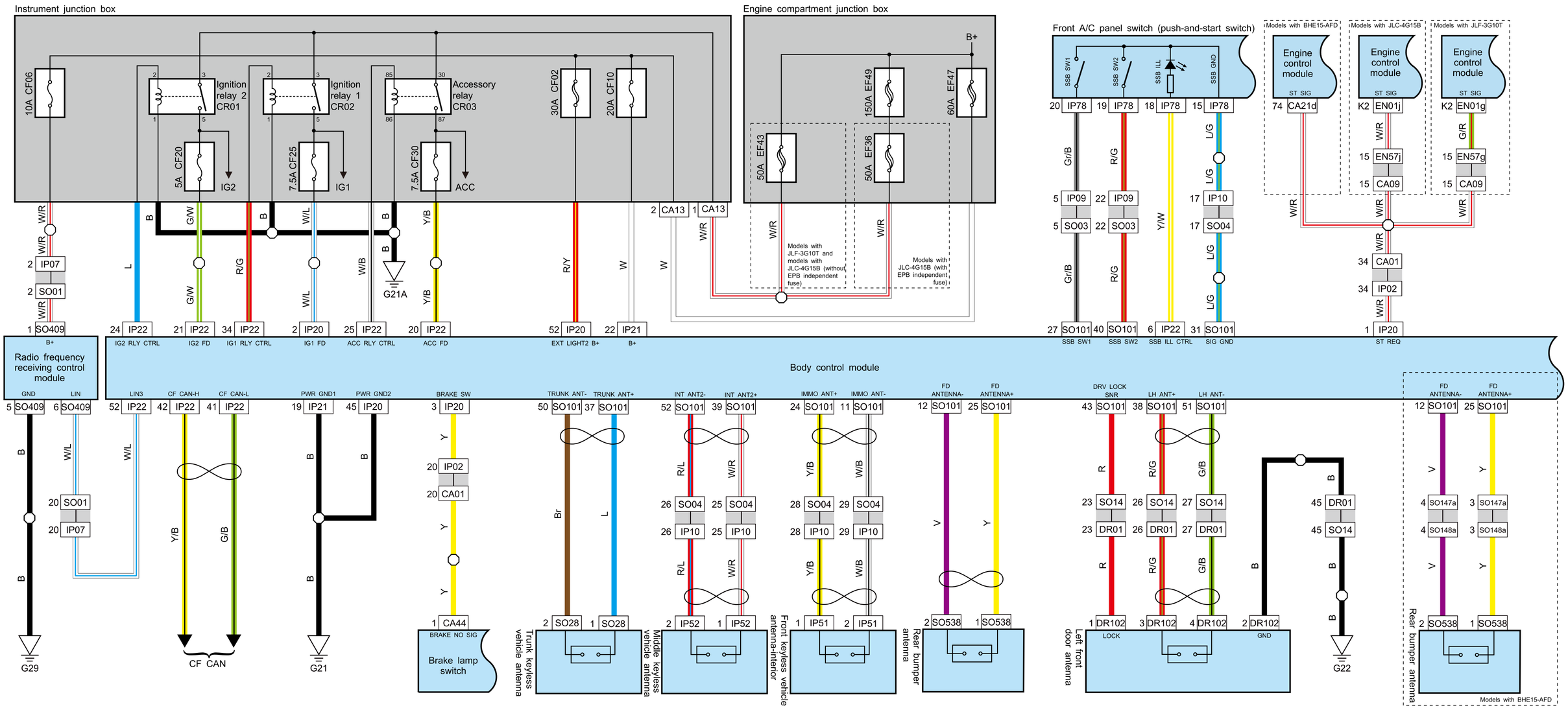
Instrument junction box
Engine compartment junction box
Front A/C panel switch (push-and-start switch)
Ignition relay 2 CR01
Ignition relay 1 CR02
Accessory relay CR03
10A CF06
5A CF20
7.5A CF25
7.5A CF30
30A CF02
20A CF10
50A EF43
150A EF49
50A EF36
60A EF47
B+
IG2
IG1
ACC
G21A
Models with JLF-3G10T and models with JLC-4G15B (without EPB independent fuse)
Models with JLC-4G15B (with EPB independent fuse)
Models with BHE15-AFD
Models with JLC-4G15B
Models with JLF-3G10T
Engine control module
Radio frequency receiving control module
Body control module
Brake lamp switch
Trunk keyless vehicle antenna
Middle keyless vehicle antenna
Front keyless vehicle antenna-interior
Rear bumper antenna
Left front door antenna
Rear bumper antenna
CF CAN
G29
G21
G22

ESC (models with EPB)

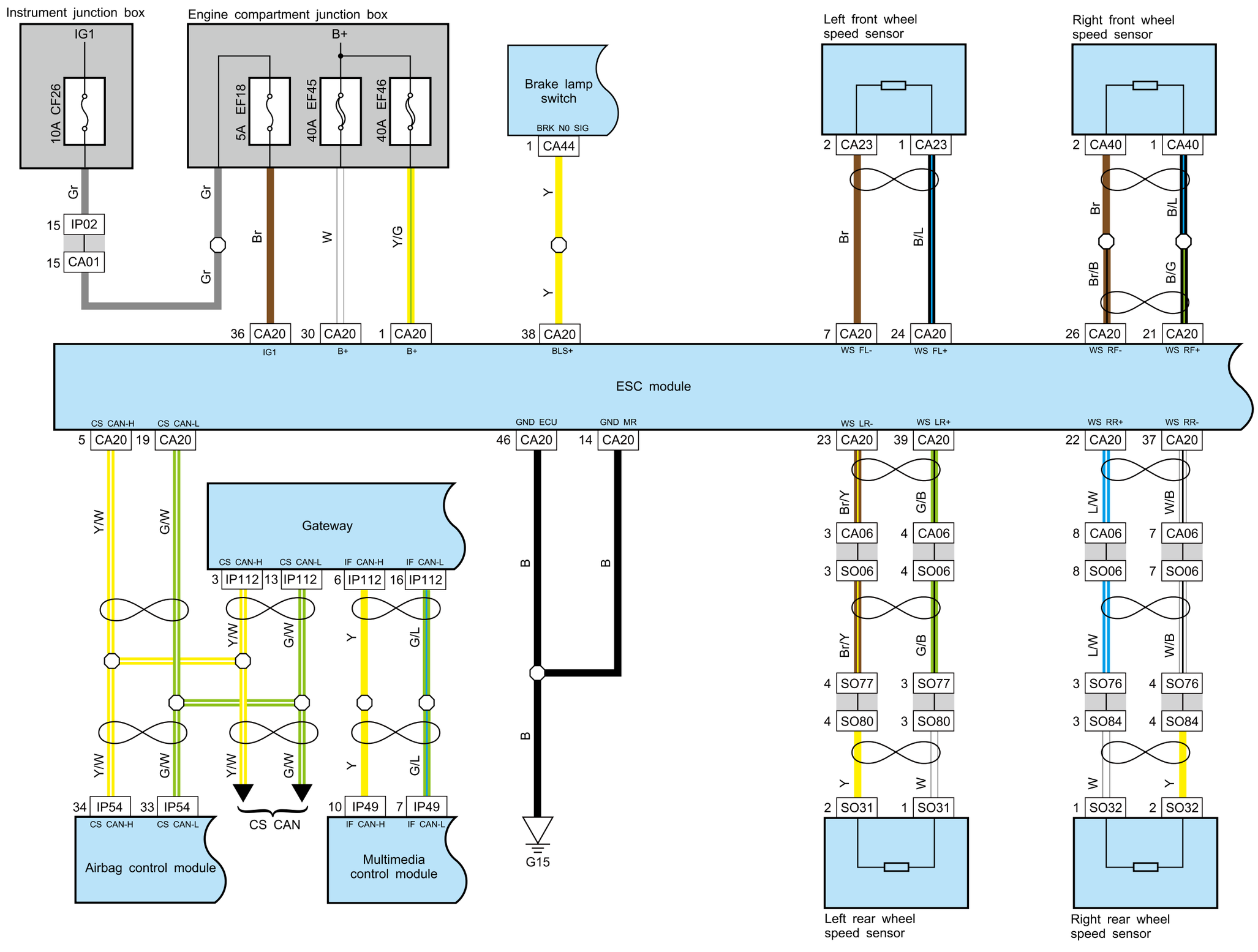

ABS (including ESC, without EPB)

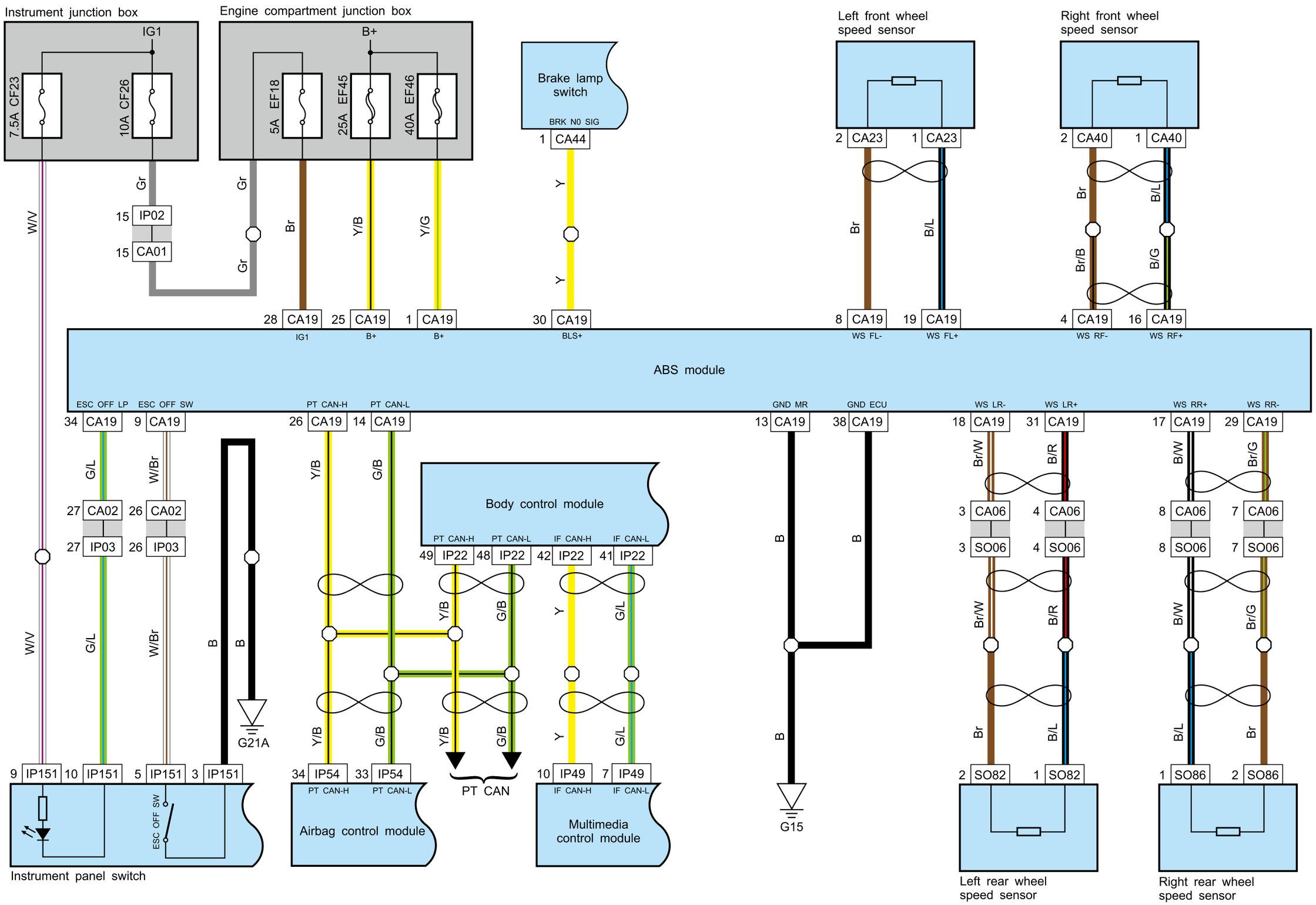

ABS (models with EPB)

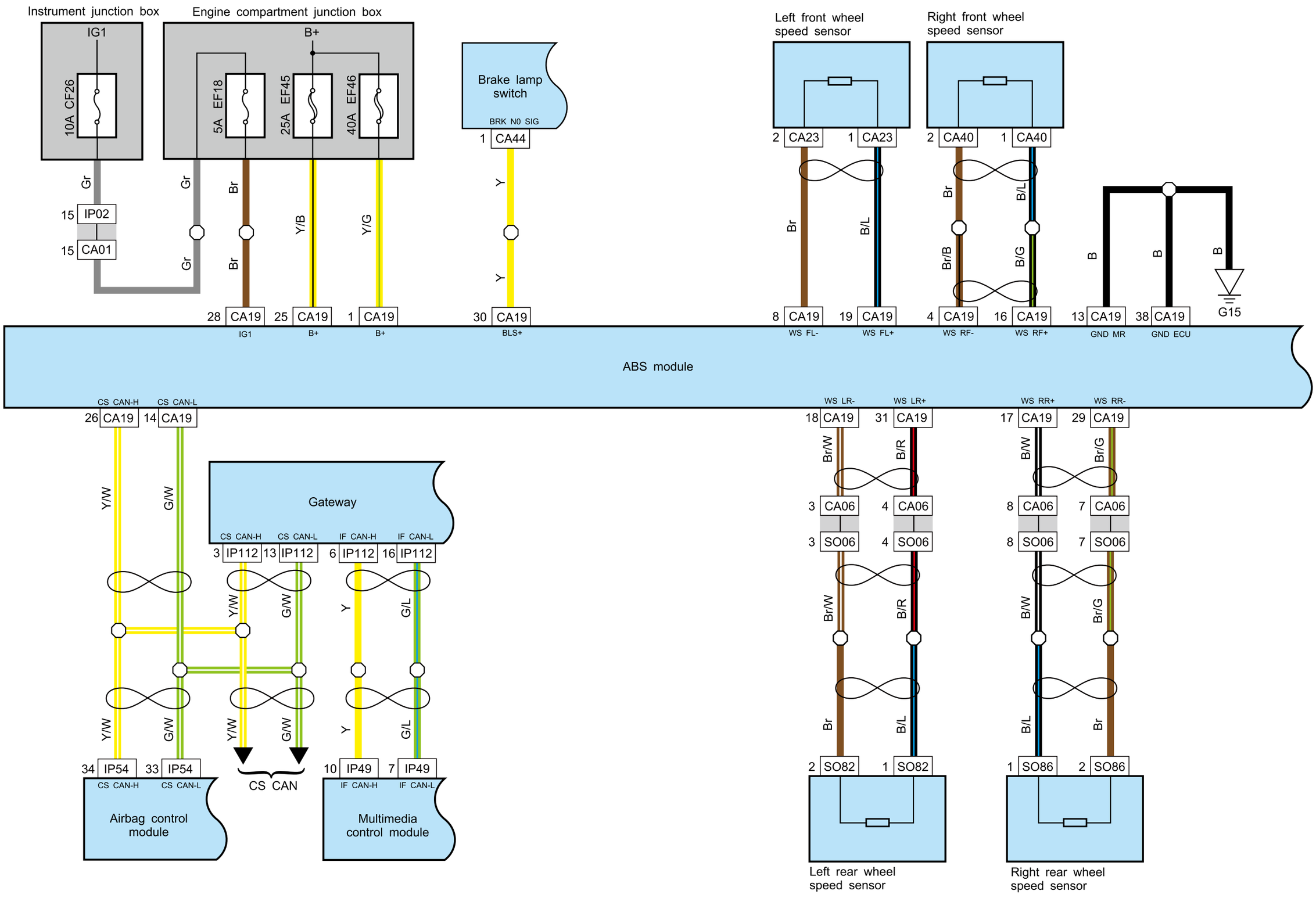

Electronic parking brake

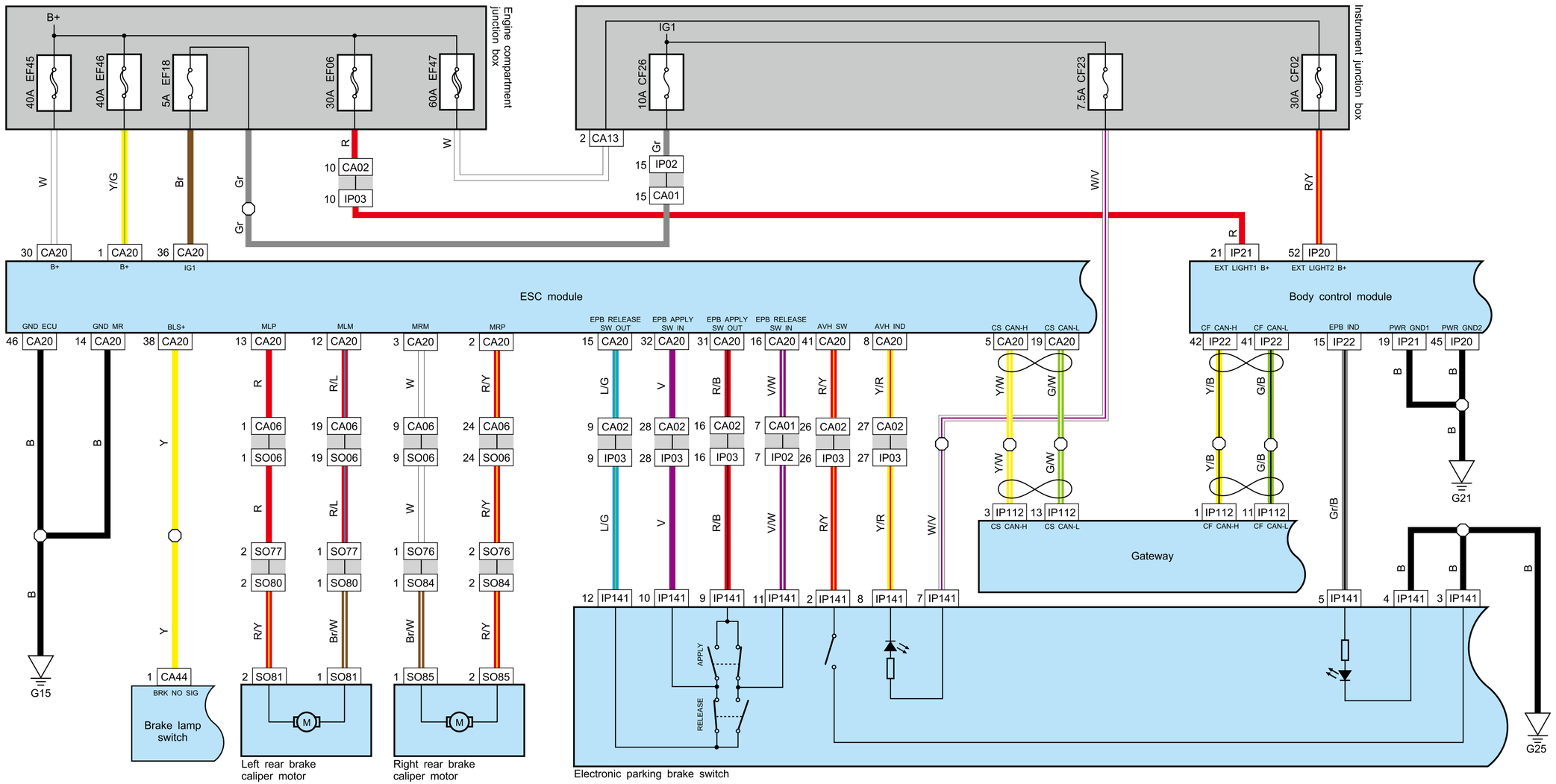

EPB (with EPB independent fuse)

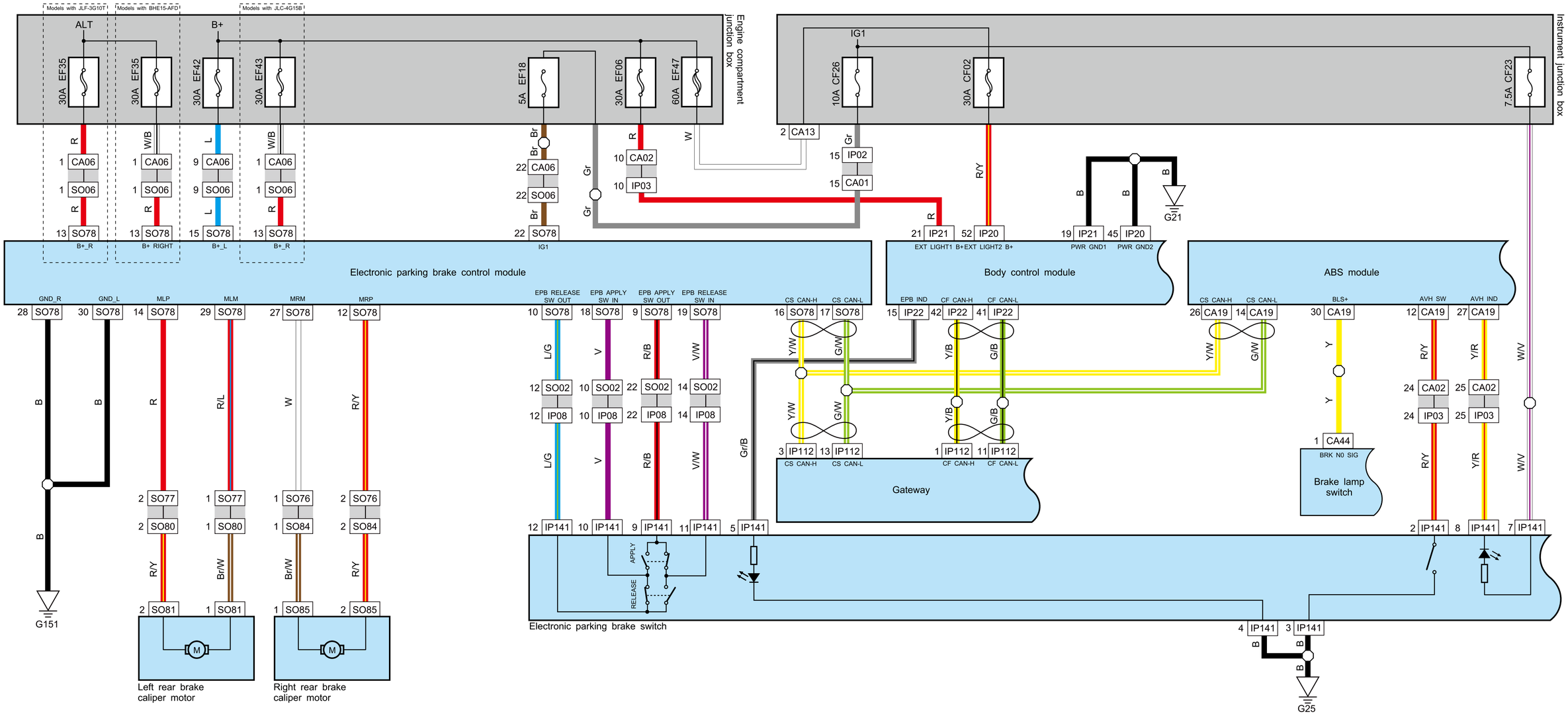

TPMS (indirect-type)

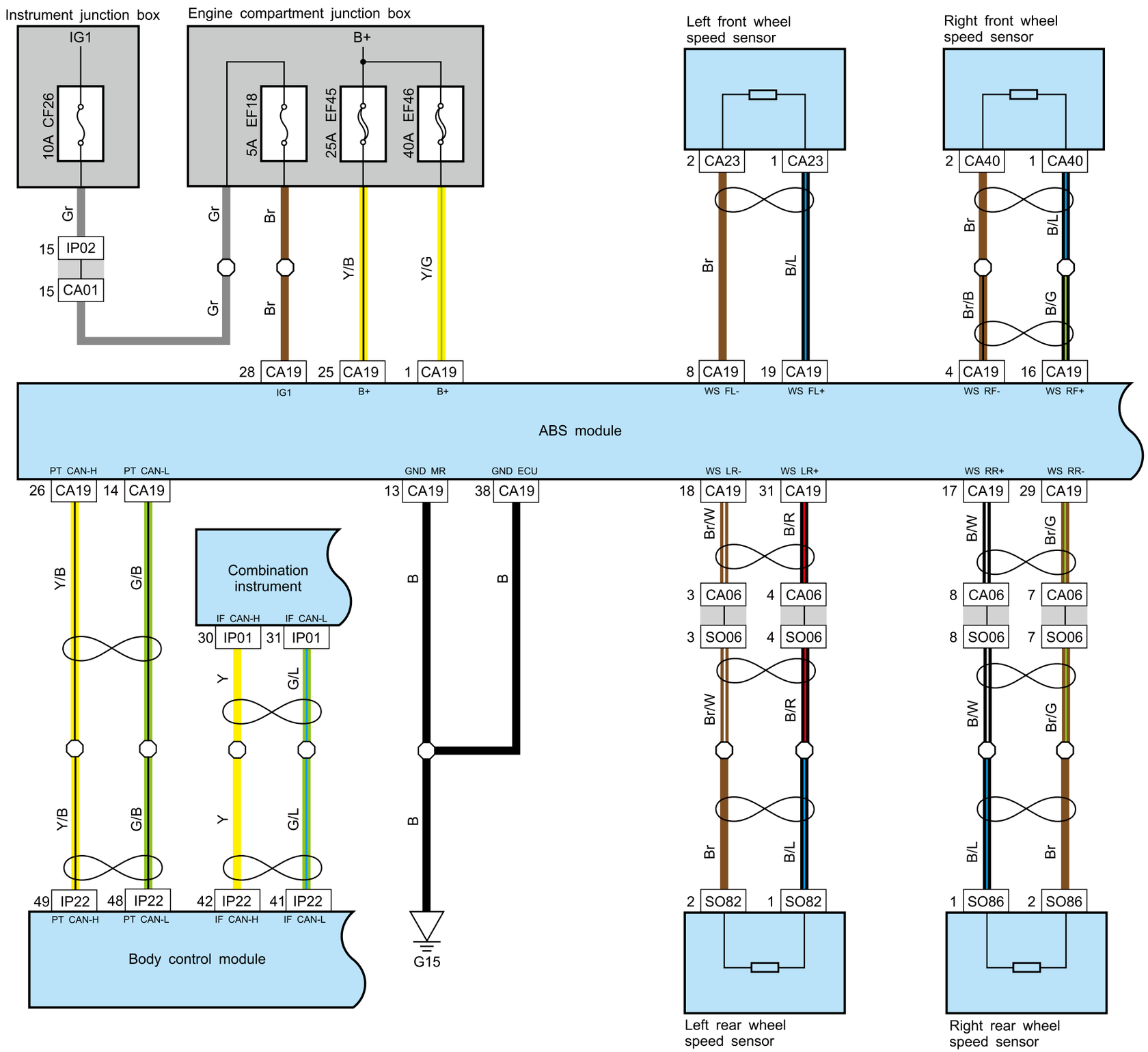

TPMS (direct-type)

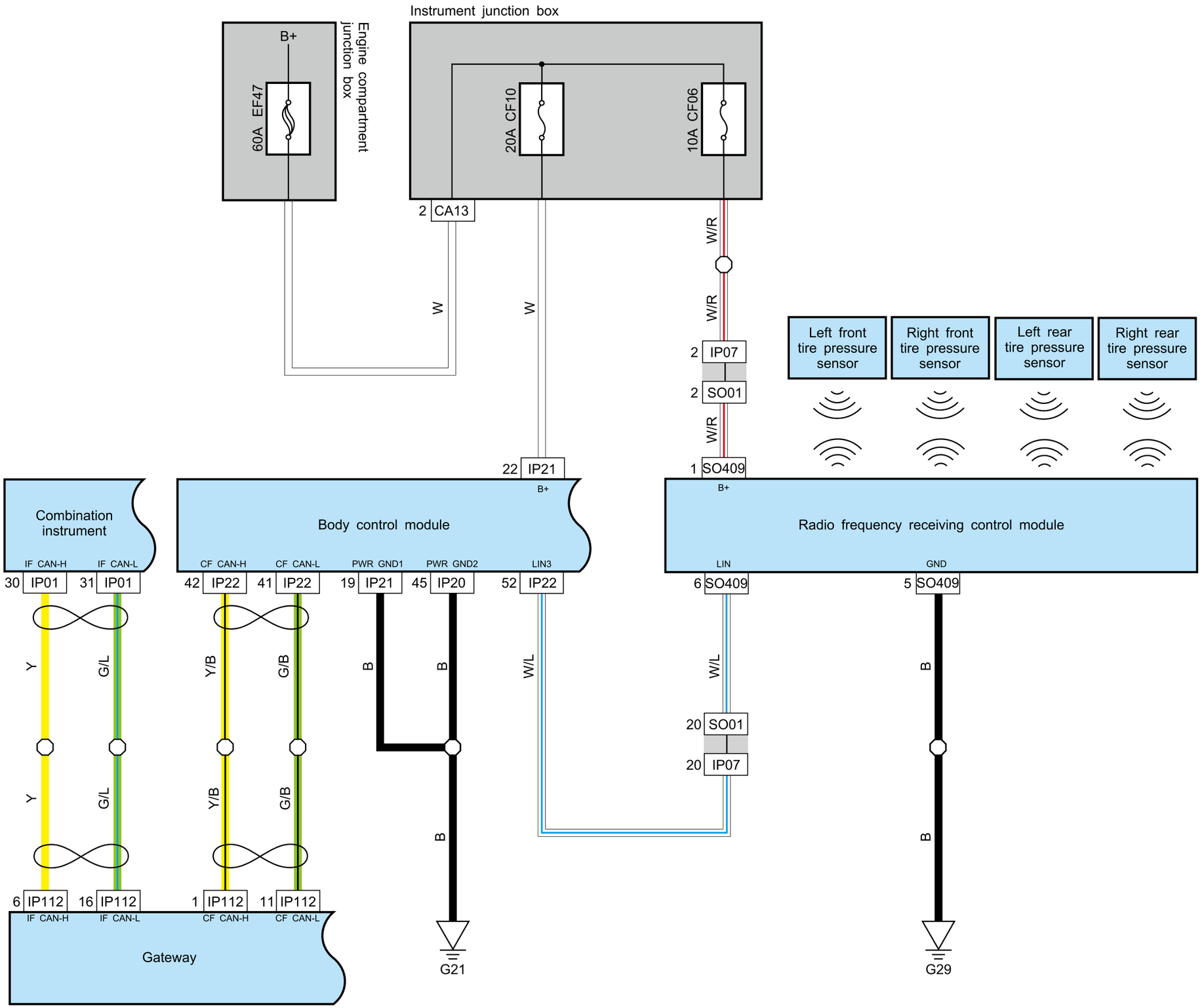

Electric power assisted steering (models with brushed EPS)

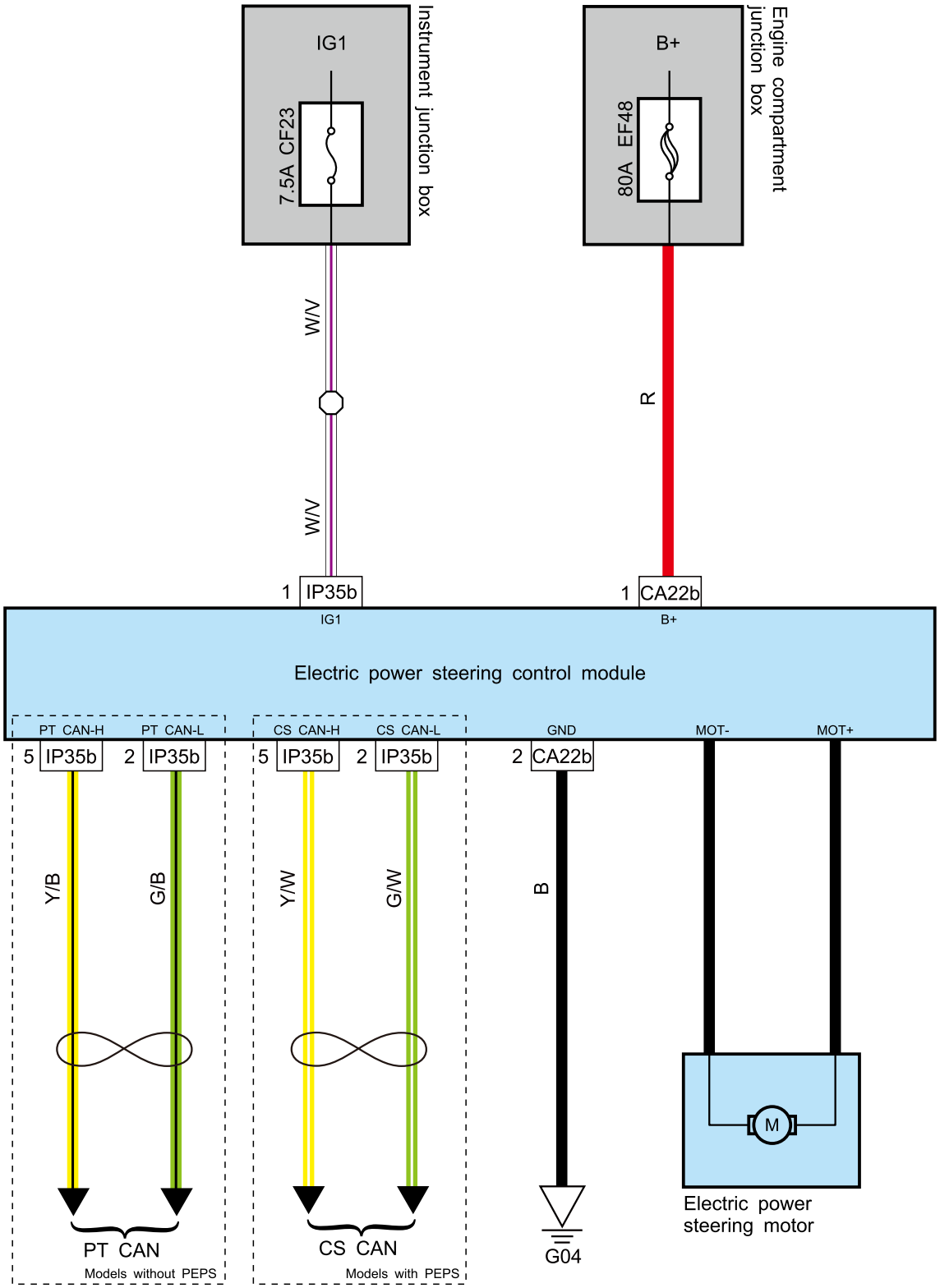

Electric power assisted steering (models with brushless EPS)

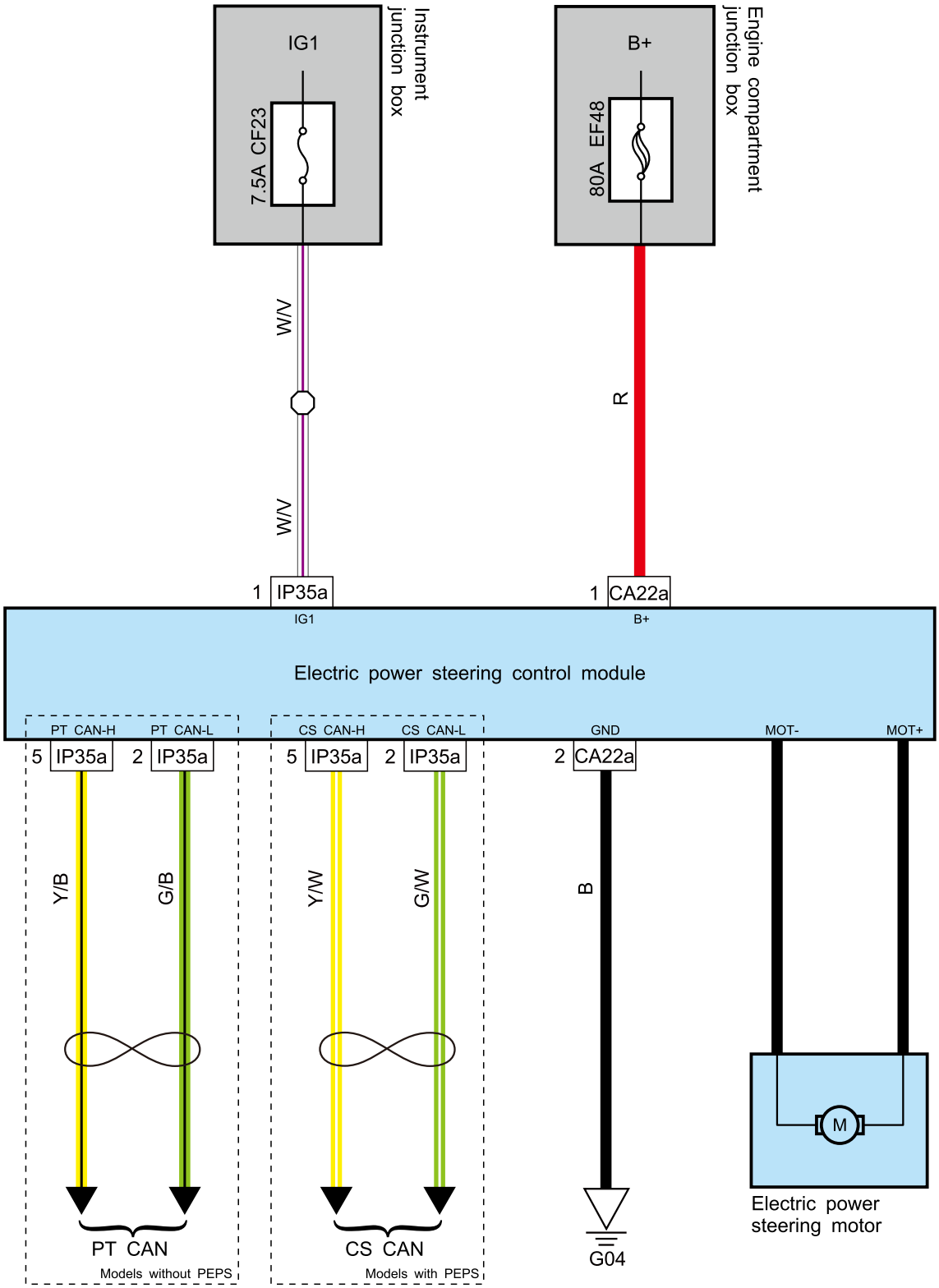

Steering Wheel Heating

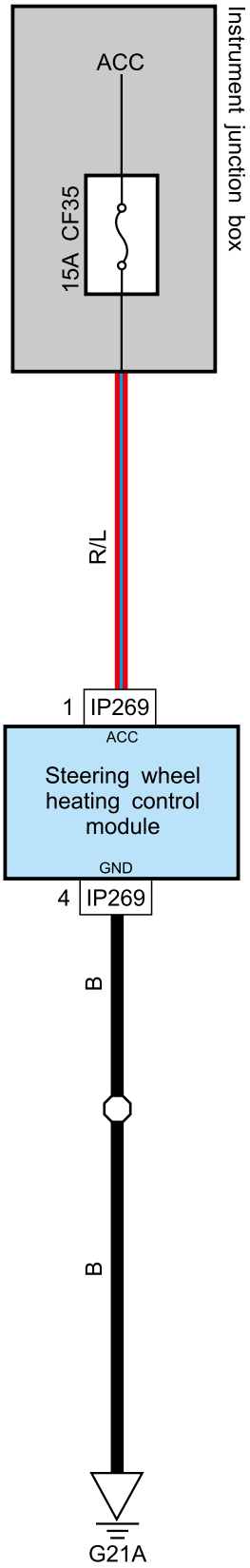

Headlights

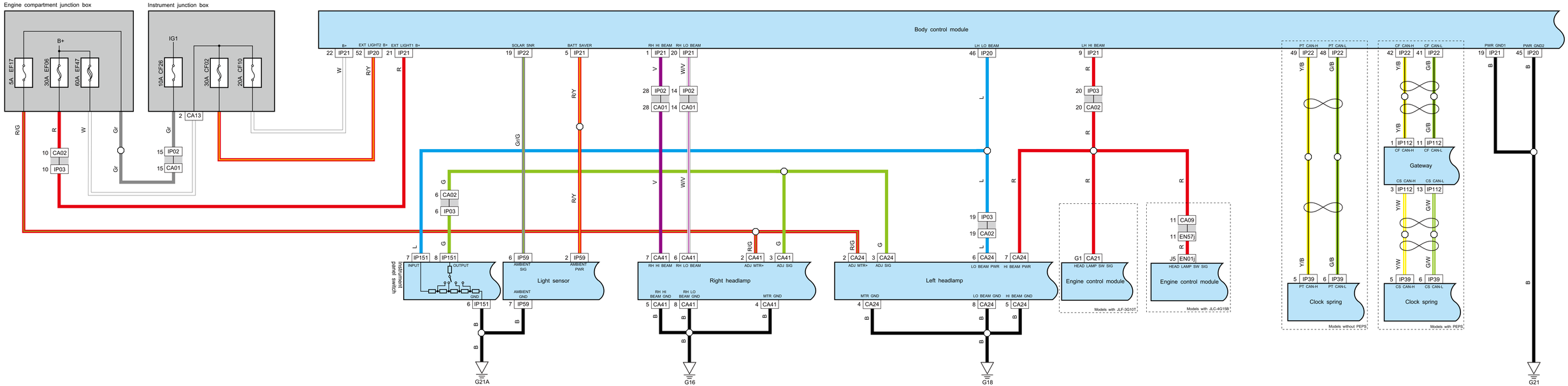
Engine compartment junction box
Instrument junction box
Body control module
B+
IG1
5A EF17
30A EF06
60A EF47
10A CF26
30A CF02
20A CF10
2 CA13
10 CA02
10 IP03
15 IP02
15 CA01
6 CA02
6 IP03
22 IP21 B+
52 IP20 EXT LIGHT2 B+
21 IP21 EXT LIGHT1 B+
19 IP22 SOLAR SNR
5 IP21 BATT SAVER
1 IP21 RH HI BEAM
20 IP21 RH LO BEAM
28 IP02
14 IP02
28 CA01
14 CA01
46 IP20 LH LO BEAM
9 IP21 LH HI BEAM
20 IP03
20 CA02
19 IP03
19 CA02
49 IP22 PT CAN-H
48 IP22 PT CAN-L
42 IP22 CF CAN-H
41 IP22 CF CAN-L
19 IP21 PWR GND1
45 IP20 PWR GND2
1 IP112 CF CAN-H
11 IP112 CF CAN-L
Gateway
CF CAN-H
CF CAN-L
CS CAN-H
CS CAN-L
3 IP112
13 IP112
5 IP39 PT CAN-H
6 IP39 PT CAN-L
5 IP39 CS CAN-H
6 IP39 CS CAN-L
Clock spring
Models without PEPS
Models with PEPS
11 CA09
11 EN57j
J5 EN01j
HEAD LAMP SW SIG
G1 CA21
Engine control module
Models with JLF-3G10T
Models with JLC-4G15B
7 IP151 INPUT
8 IP151 OUTPUT
Instrument panel switch
6 IP151
6 IP59 AMBIENT SIG
2 IP59 AMBIENT PWR
AMBIENT GND
7 IP59
Light sensor
7 CA41 RH HI BEAM
6 CA41 RH LO BEAM
2 CA41 ADJ MTR+
3 CA41 ADJ SIG
RH HI BEAM GND
RH LO BEAM GND
MTR GND
5 CA41
8 CA41
4 CA41
Right headlamp
2 CA24 ADJ MTR+
3 CA24 ADJ SIG
MTR GND
4 CA24
Left headlamp
6 CA24 LO BEAM PWR
7 CA24 HI BEAM PWR
LO BEAM GND
HI BEAM GND
8 CA24
5 CA24
G21A
G16
G18
G21

Position lamp, license lamp

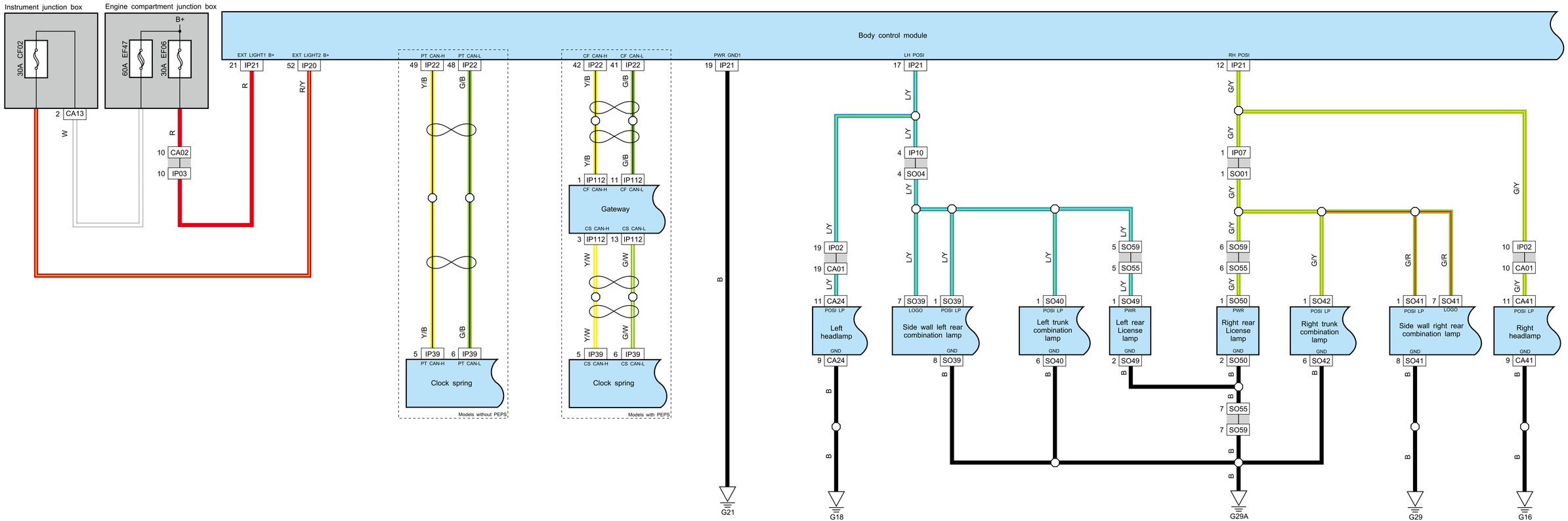

Daytime running lamp

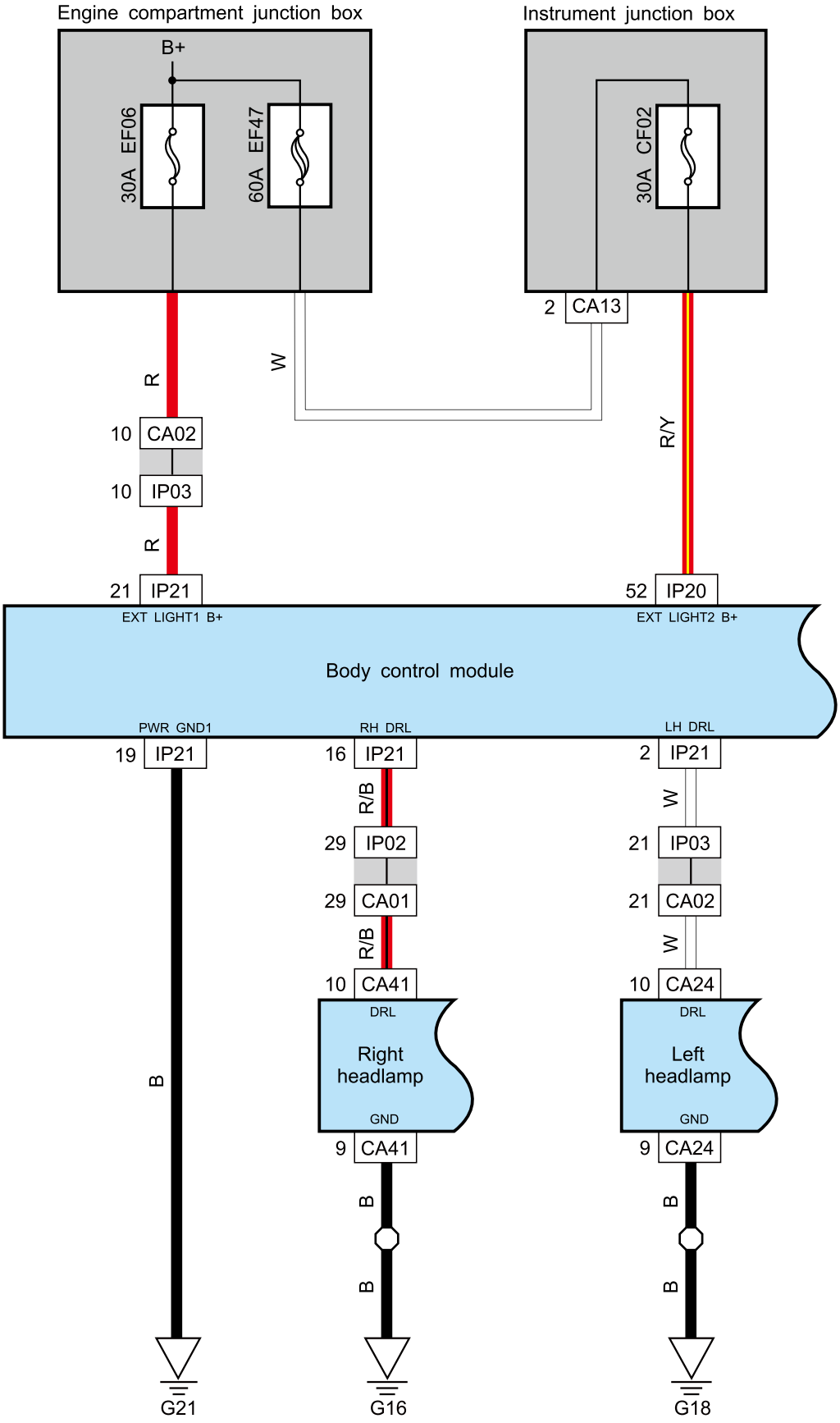

Fog light

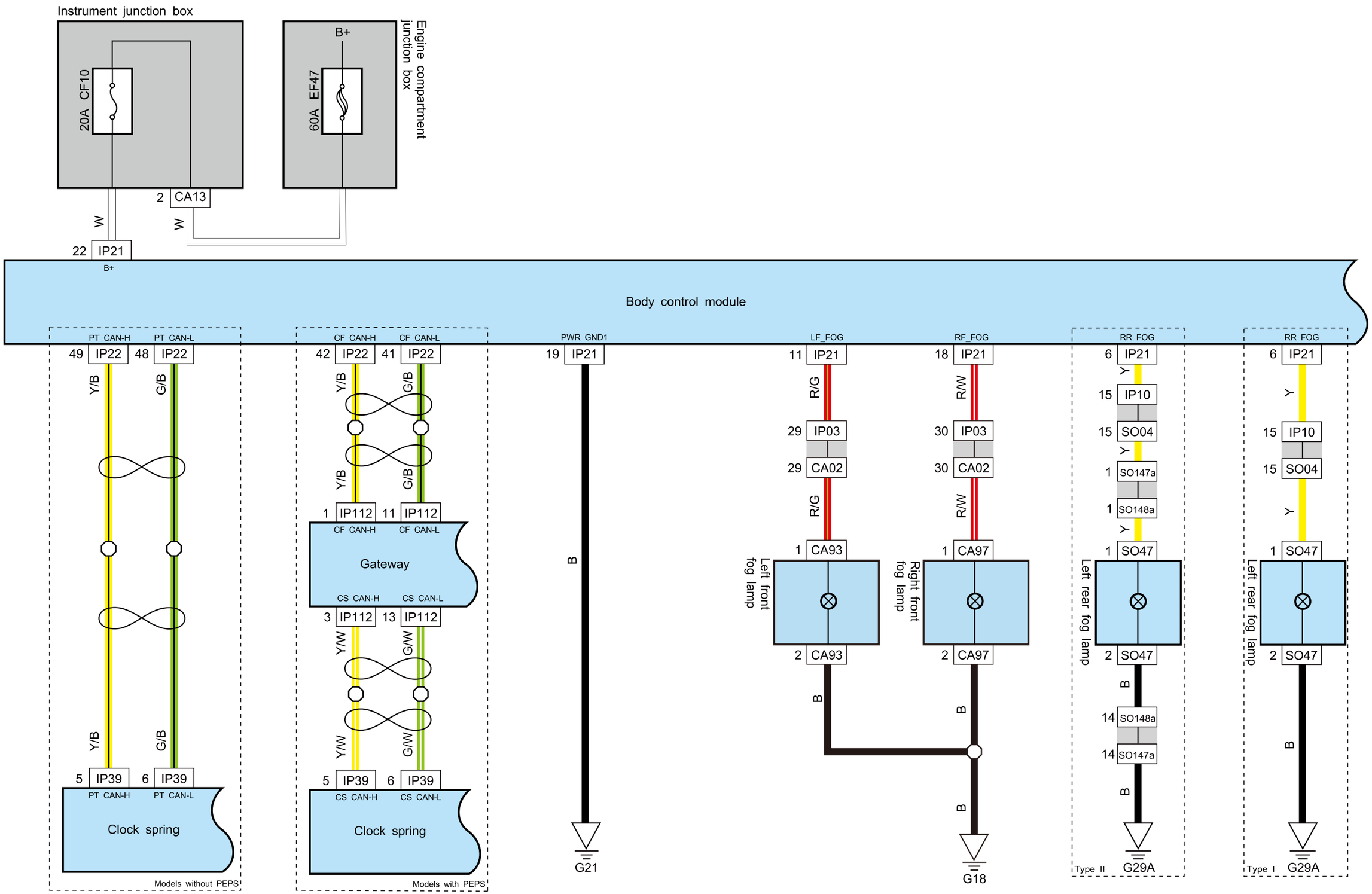
Instrument junction box
20A CF10
B+
60A EF47
Engine compartment junction box
2 CA13
W
W
22 IP21
B+
Body control module
PT CAN-H
PT CAN-L
49 IP22
48 IP22
Y/B
G/B
5 IP39
6 IP39
PT CAN-H
PT CAN-L
Clock spring
Models without PEPS
CF CAN-H
CF CAN-L
42 IP22
41 IP22
1 IP112
11 IP112
Gateway
CS CAN-H
CS CAN-L
3 IP112
13 IP112
Y/W
G/W
5 IP39
6 IP39
Clock spring
Models with PEPS
PWR GND1
19 IP21
B
G21
LF_FOG
11 IP21
R/G
29 IP03
29 CA02
1 CA93
Left front fog lamp
2 CA93
RF_FOG
18 IP21
R/W
30 IP03
30 CA02
1 CA97
Right front fog lamp
2 CA97
G18
RR FOG
6 IP21
Y
15 IP10
15 SO04
1 SO147a
1 SO148a
1 SO47
Left rear fog lamp
2 SO47
14 SO148a
14 SO147a
B
Type II
G29A
RR FOG
6 IP21
Y
15 IP10
15 SO04
1 SO47
Left rear fog lamp
2 SO47
B
Type I
G29A

Turn signal lamp, hazard warning light

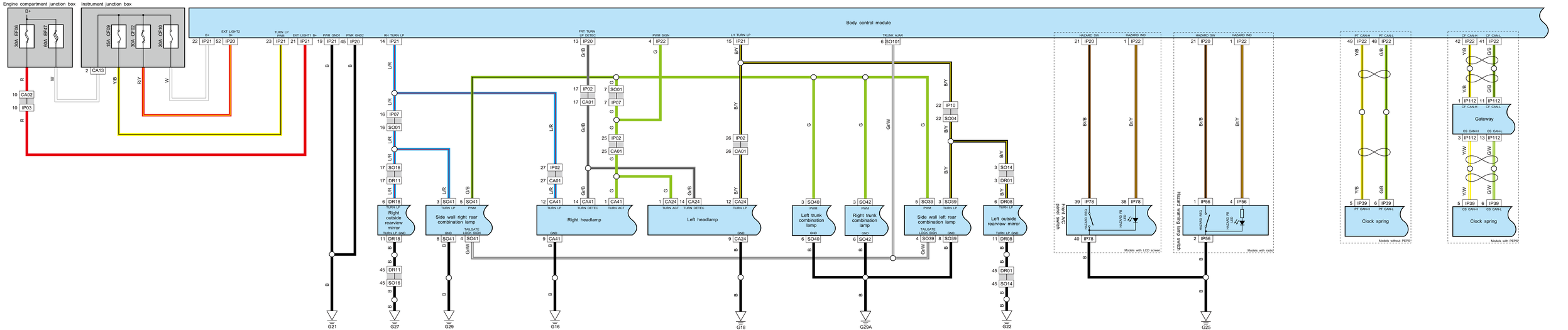

Brake lamp

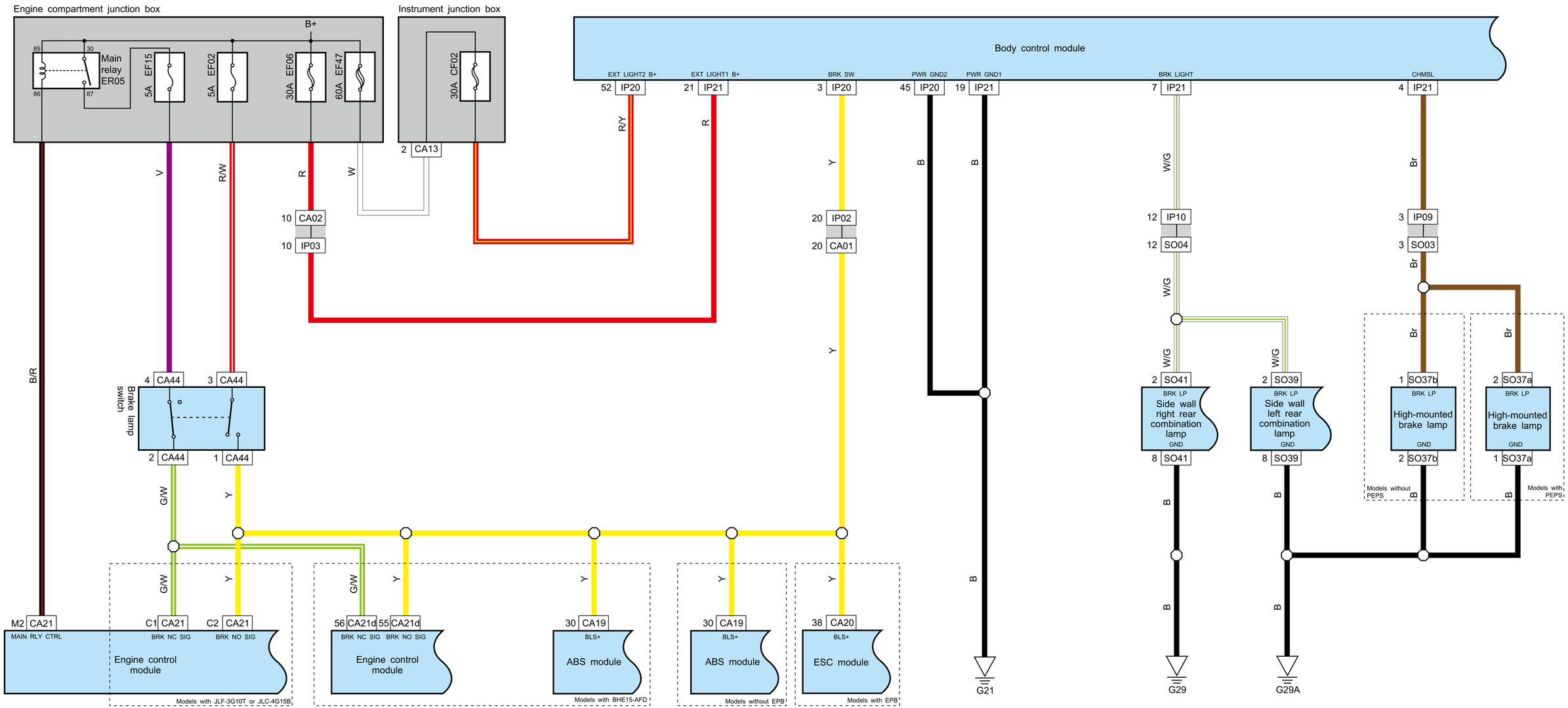
Engine compartment junction box
Instrument junction box
B+
Main relay ER05
85
30
86
87
5A EF15
5A EF02
30A EF06
60A EF47
30A CF02
2 CA13
Body control module
EXT LIGHT2 B+
EXT LIGHT1 B+
BRK SW
PWR GND2
PWR GND1
BRK LIGHT
CHMSL
52 IP20
21 IP21
3 IP20
45 IP20
19 IP21
7 IP21
4 IP21
R/Y
R
Y
B
B
W/G
Br
10 CA02
10 IP03
20 IP02
20 CA01
12 IP10
12 SO04
3 IP09
3 SO03
B/R
V
R/W
R
W
4 CA44
3 CA44
Brake lamp switch
2 CA44
1 CA44
G/W
Y
2 SO41
BRK LP
Side wall right rear combination lamp
GND
8 SO41
2 SO39
BRK LP
Side wall left rear combination lamp
GND
8 SO39
1 SO37b
BRK LP
High-mounted brake lamp
GND
2 SO37b
2 SO37a
BRK LP
High-mounted brake lamp
GND
1 SO37a
Models without PEPS
Models with PEPS
M2 CA21
MAIN RLY CTRL
C1 CA21
BRK NC SIG
C2 CA21
BRK NO SIG
Engine control module
Models with JLF-3G10T or JLC-4G15B
56 CA21d
BRK NC SIG
55 CA21d
BRK NO SIG
Engine control module
30 CA19
BLS+
ABS module
Models with BHE15-AFD
30 CA19
BLS+
ABS module
Models without EPB
38 CA20
BLS+
ESC module
Models with EPB
G21
G29
G29A

Reverse light

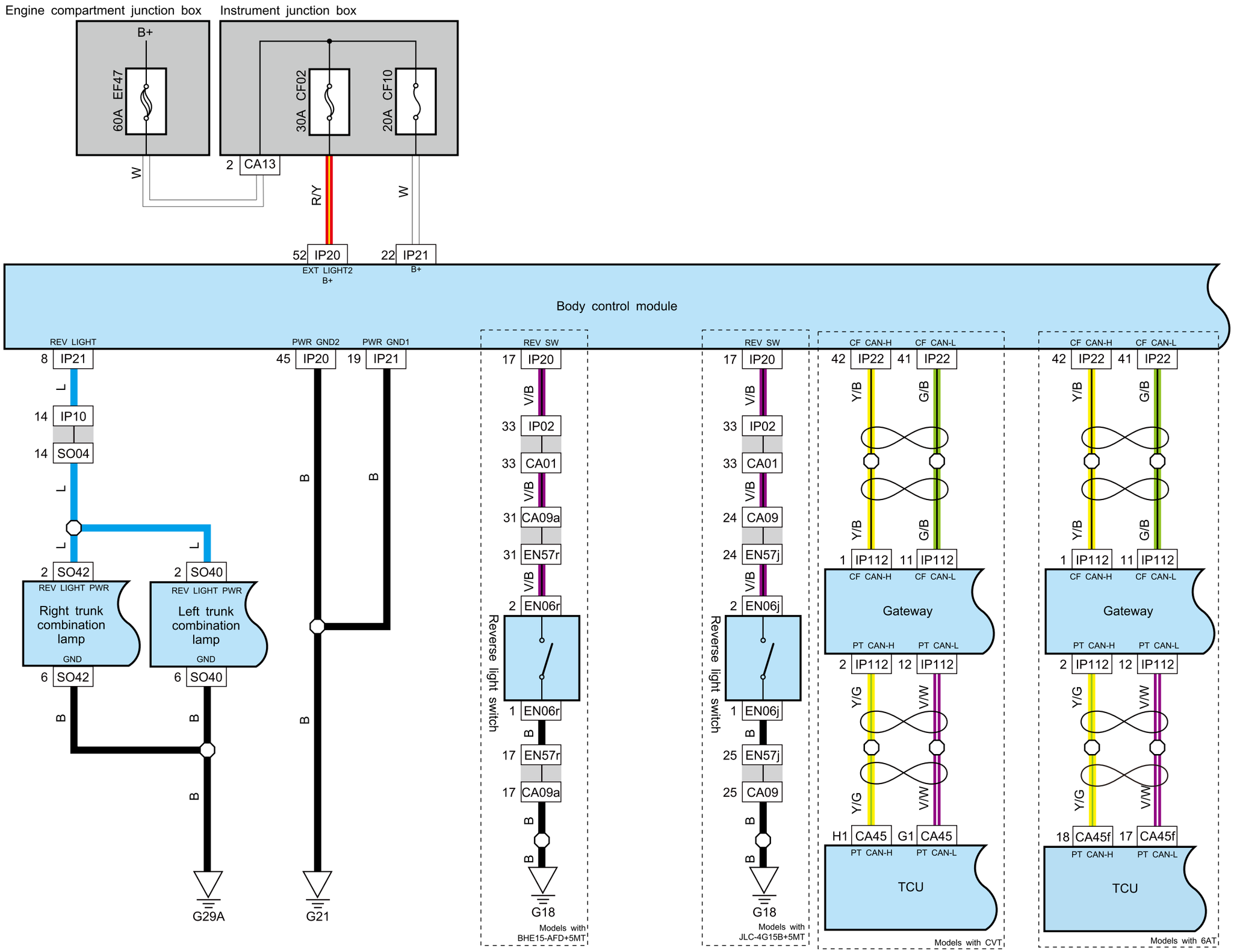

Interior light

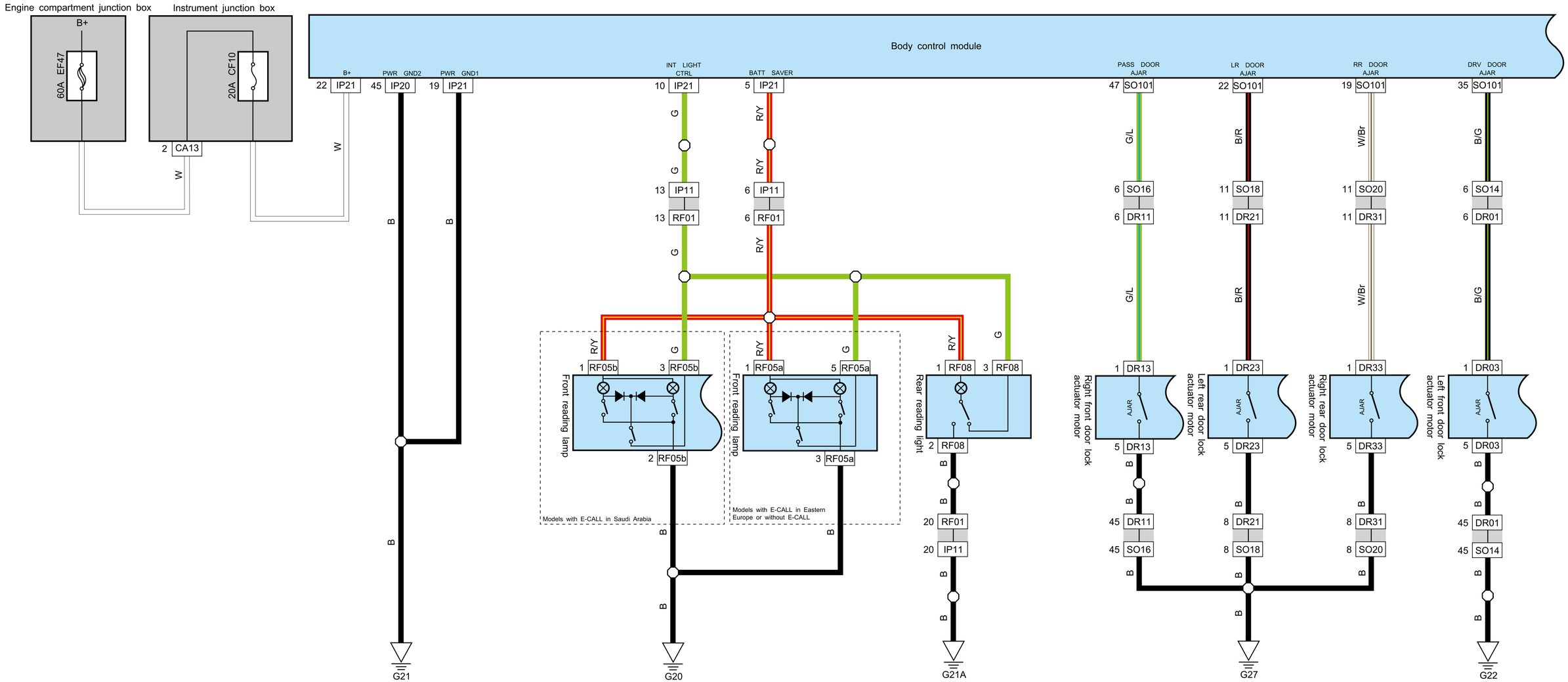

Luggage compartment light

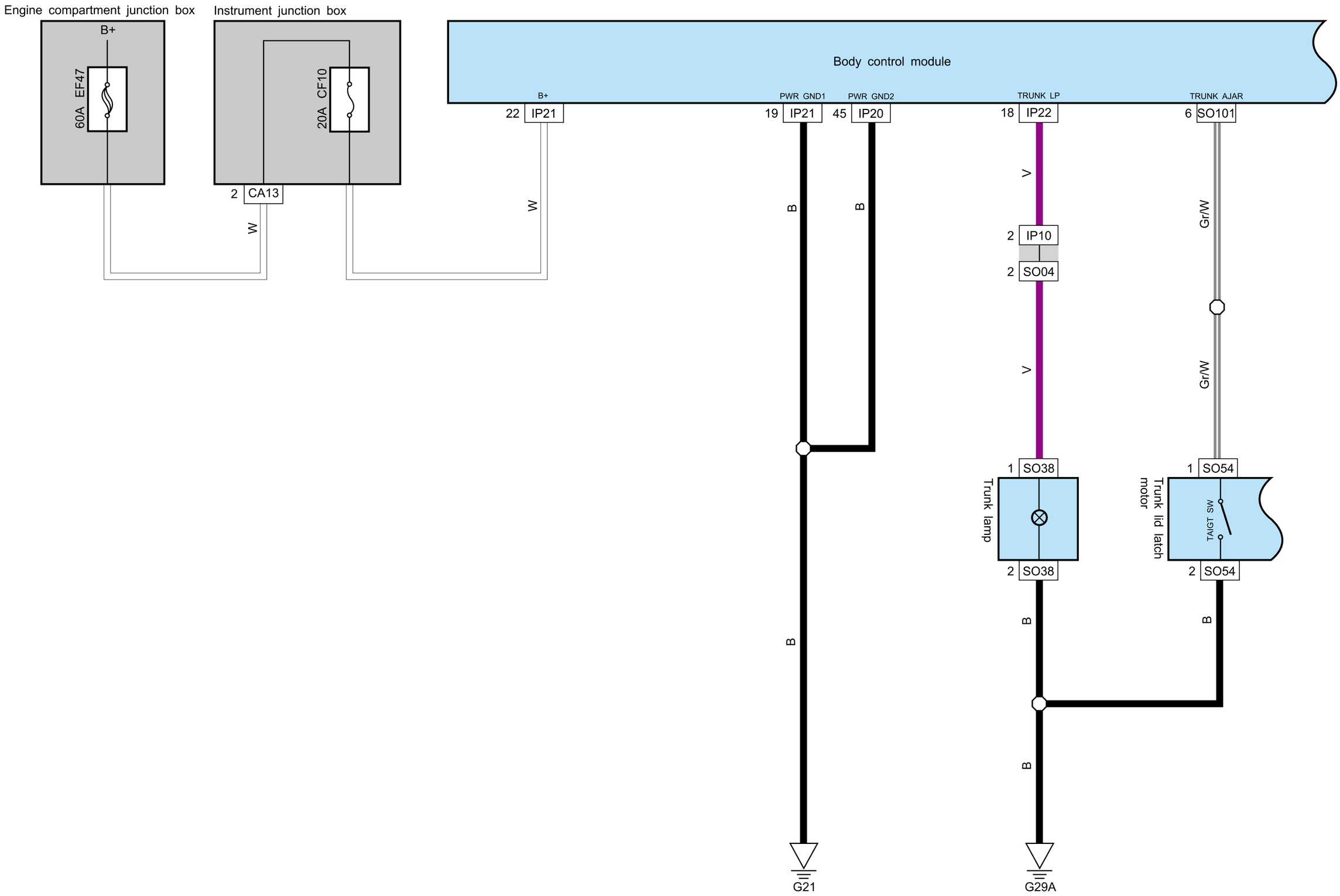

Back lighting

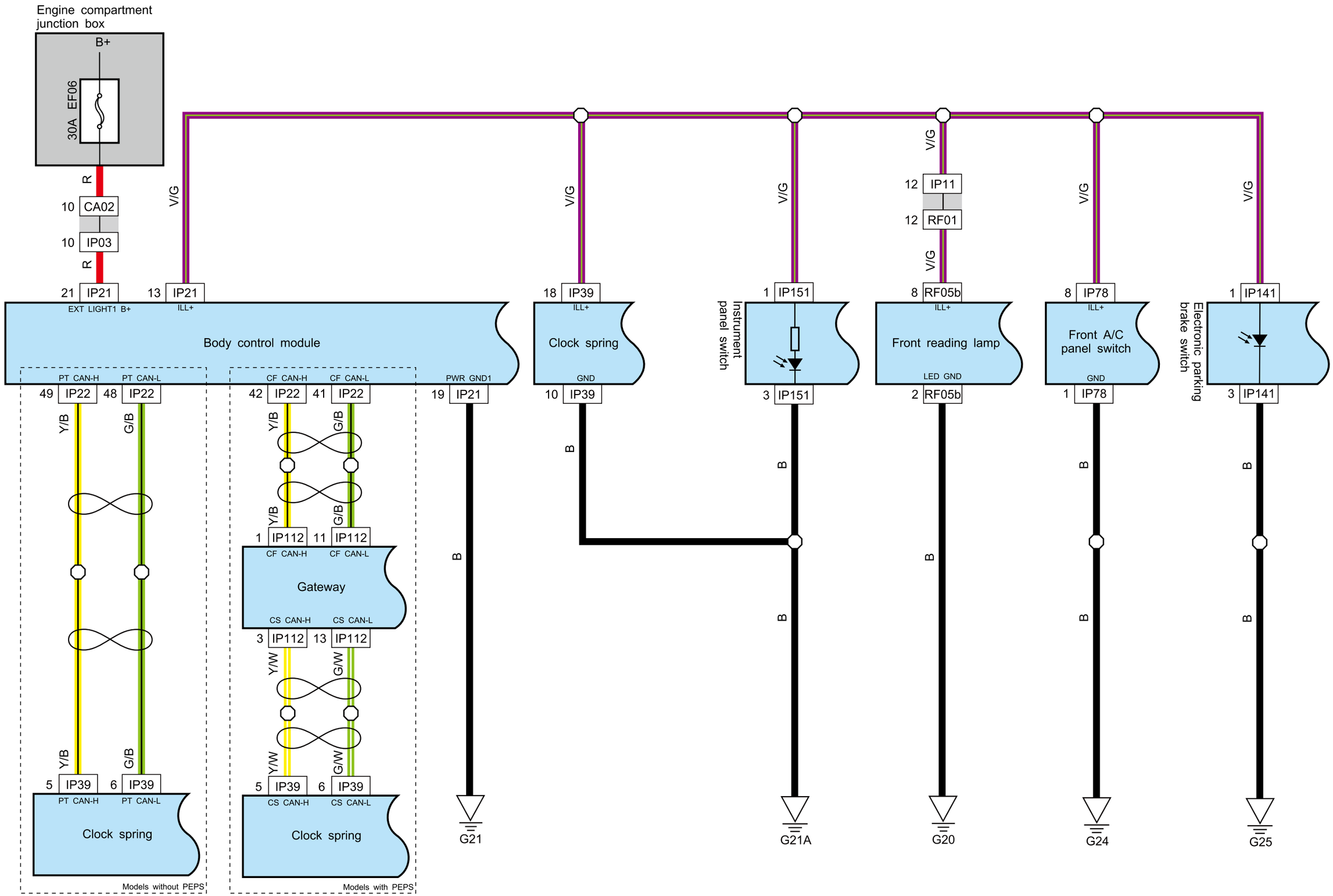

BCM

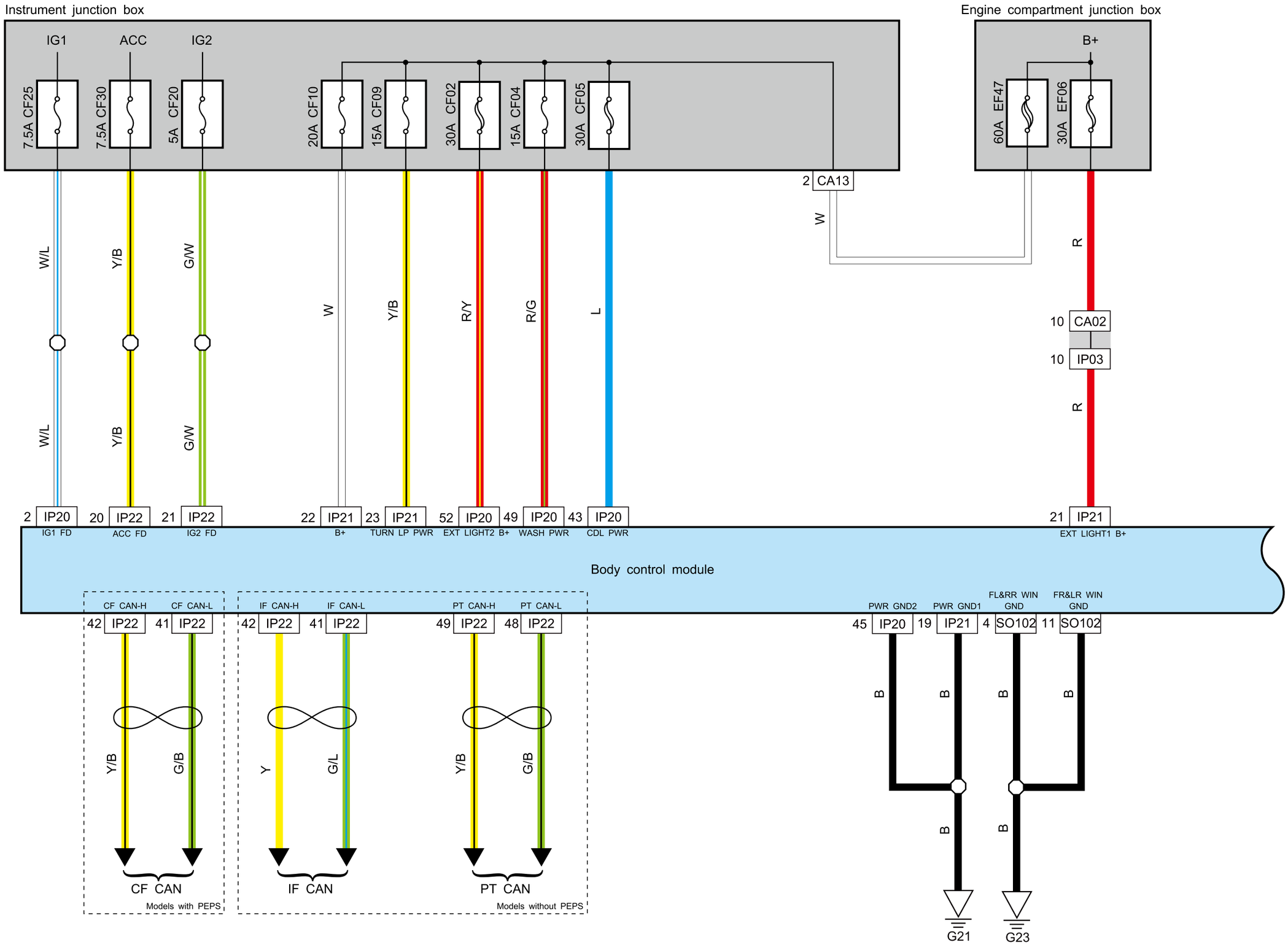
Instrument junction box
IG1
ACC
IG2
7.5A CF25
7.5A CF30
5A CF20
20A CF10
15A CF09
30A CF02
15A CF04
30A CF05
Engine compartment junction box
B+
60A EF47
30A EF06
2 CA13
W
R
10 CA02
10 IP03
R
W/L
Y/B
G/W
W
Y/B
R/Y
R/G
L
2 IP20
IG1 FD
20 IP22
ACC FD
21 IP22
IG2 FD
22 IP21
B+
23 IP21
TURN LP PWR
52 IP20
EXT LIGHT2 B+
49 IP20
WASH PWR
43 IP20
CDL PWR
21 IP21
EXT LIGHT1 B+
Body control module
CF CAN-H
CF CAN-L
42 IP22
41 IP22
Y/B
G/B
CF CAN
Models with PEPS
IF CAN-H
IF CAN-L
42 IP22
41 IP22
Y
G/L
IF CAN
PT CAN-H
PT CAN-L
49 IP22
48 IP22
Y/B
G/B
PT CAN
Models without PEPS
PWR GND2
PWR GND1
FL&RR WIN GND
FR&LR WIN GND
45 IP20
19 IP21
4 SO102
11 SO102
B
G21
G23

Body anti-theft control system

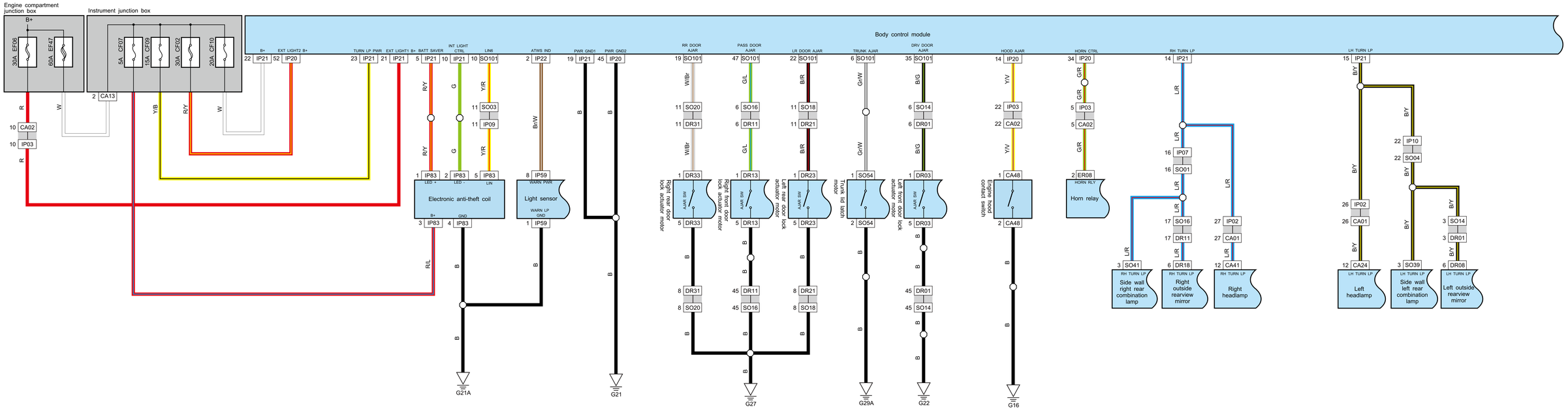

Central lock

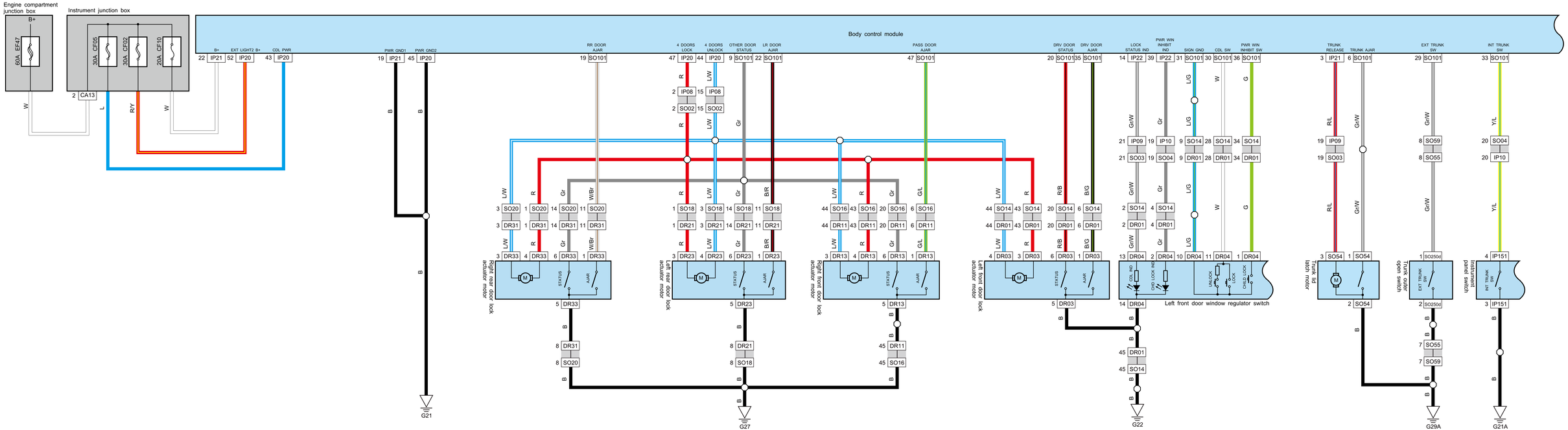

Electronic steering column lock (models with 5MT)

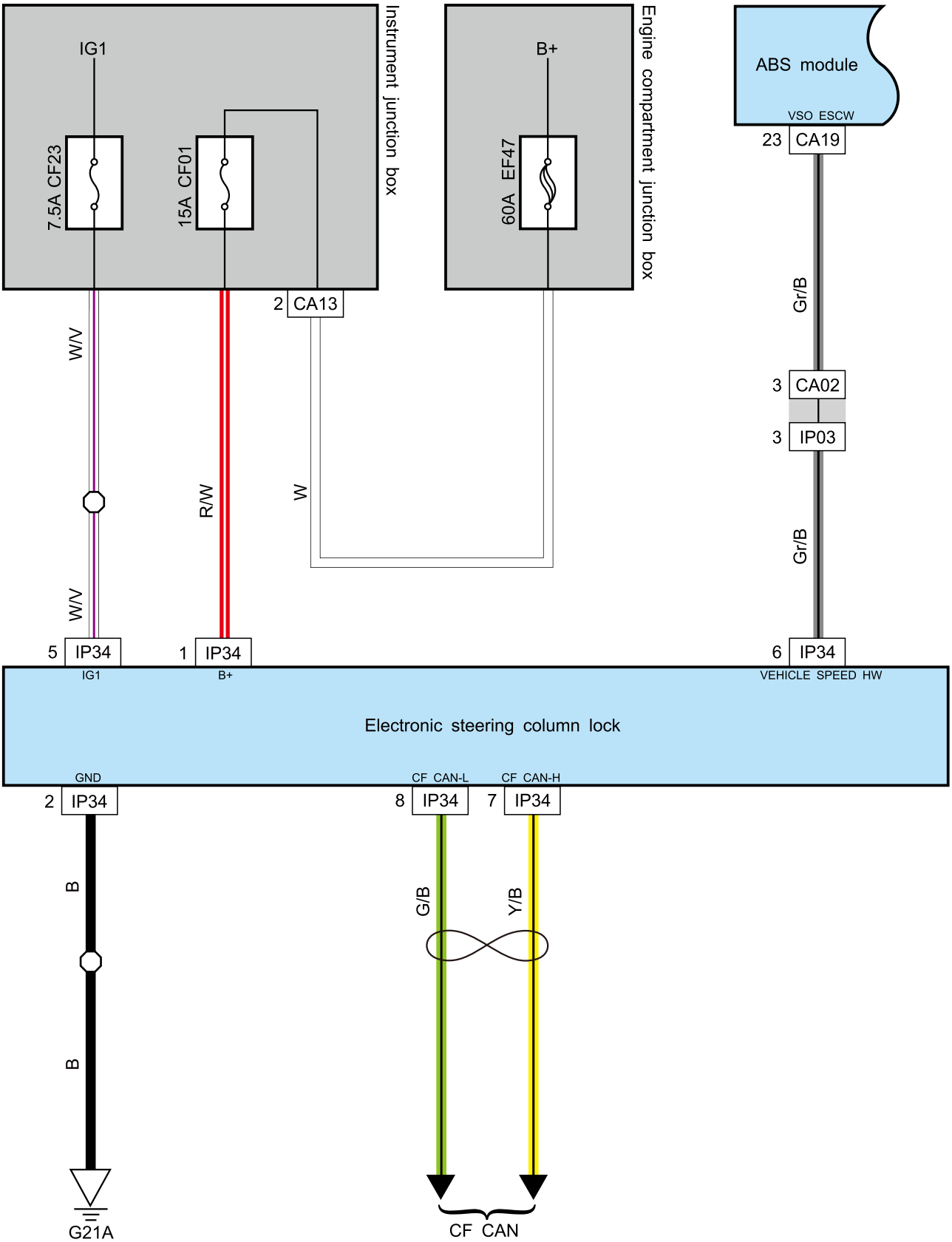

Power exterior rearview mirrors

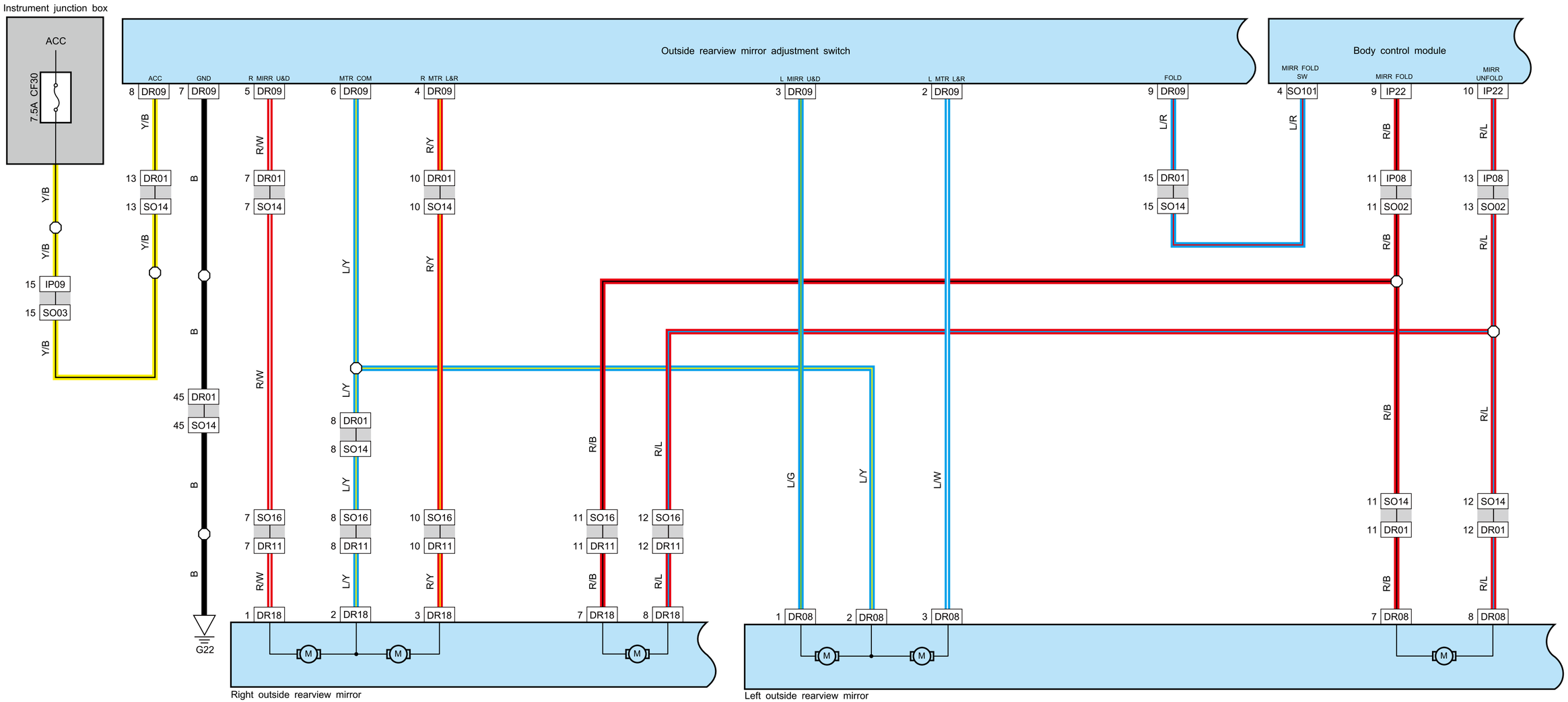

Power seat

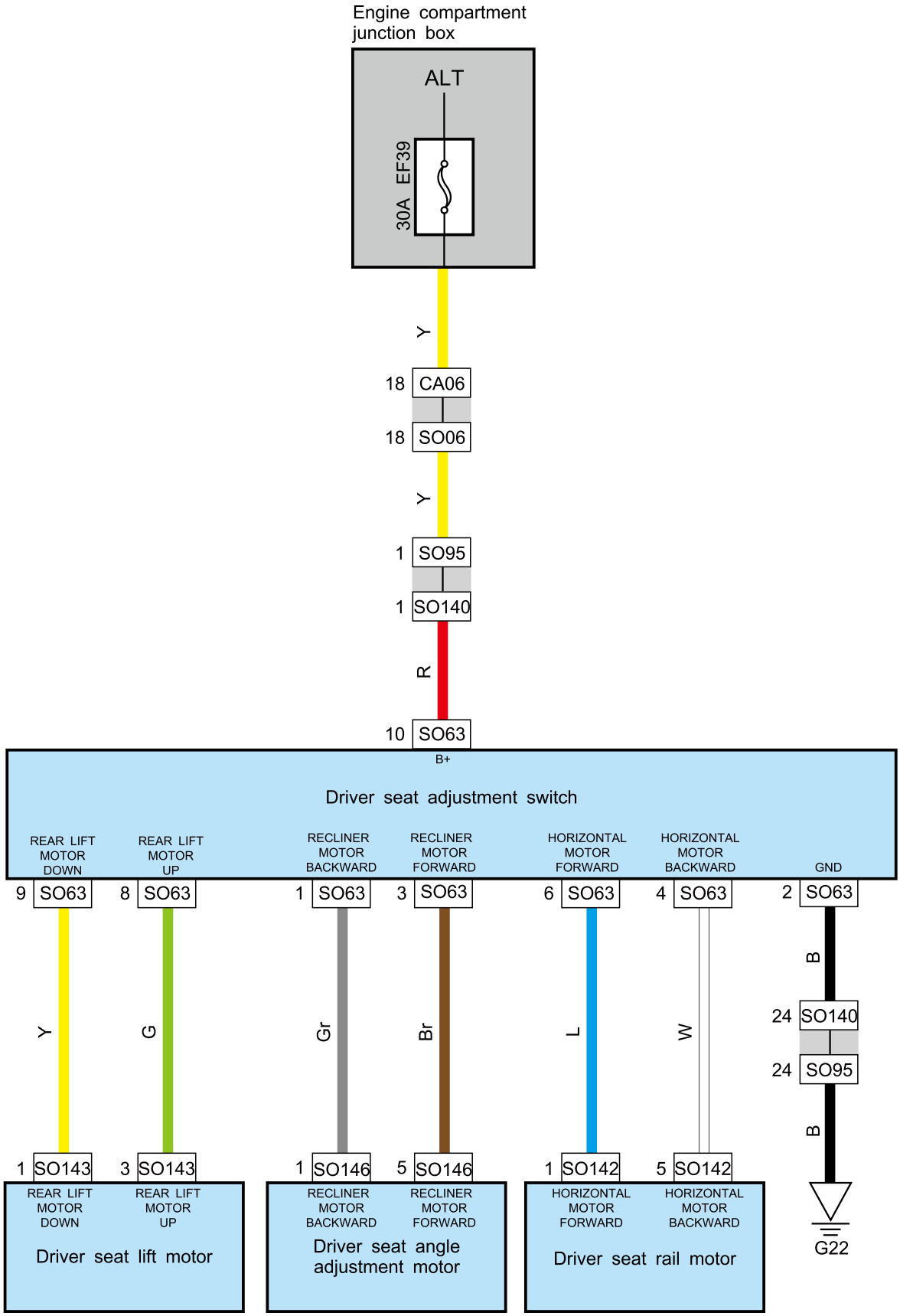
Engine compartment junction box
ALT
30A EF39
Y
18 CA06
18 SO06
Y
1 SO95
1 SO140
R
10 SO63
B+
Driver seat adjustment switch
REAR LIFT MOTOR DOWN
REAR LIFT MOTOR UP
RECLINER MOTOR BACKWARD
RECLINER MOTOR FORWARD
HORIZONTAL MOTOR FORWARD
HORIZONTAL MOTOR BACKWARD
GND
9 SO63
8 SO63
1 SO63
3 SO63
6 SO63
4 SO63
2 SO63
Y
G
Gr
Br
L
W
B
24 SO140
24 SO95
B
1 SO143
3 SO143
1 SO146
5 SO146
1 SO142
5 SO142
REAR LIFT MOTOR DOWN
REAR LIFT MOTOR UP
Driver seat lift motor
RECLINER MOTOR BACKWARD
RECLINER MOTOR FORWARD
Driver seat angle adjustment motor
HORIZONTAL MOTOR FORWARD
HORIZONTAL MOTOR BACKWARD
Driver seat rail motor
G22

Seat heating

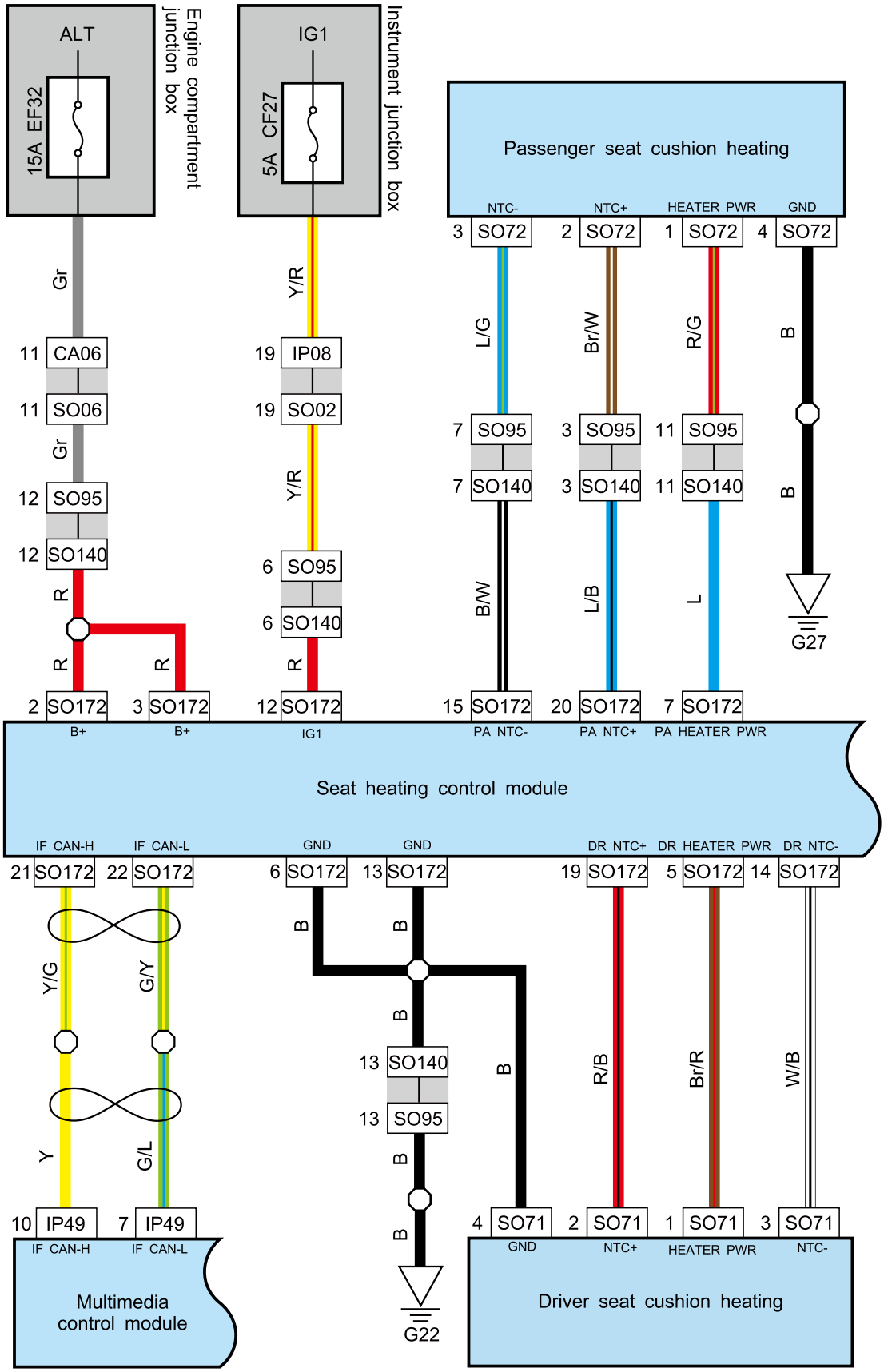

Front wiper washer system

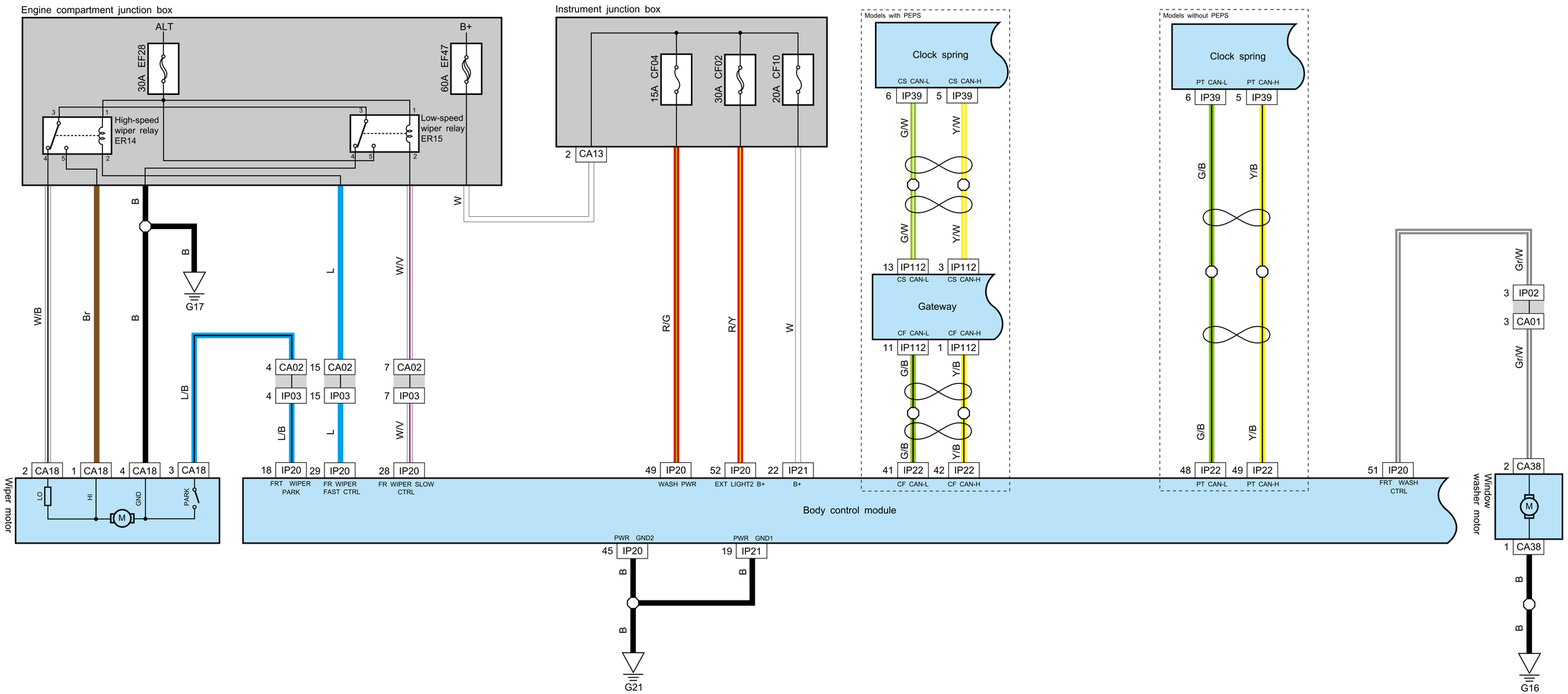

Electric A/C (models with radio JLC-4G15B)

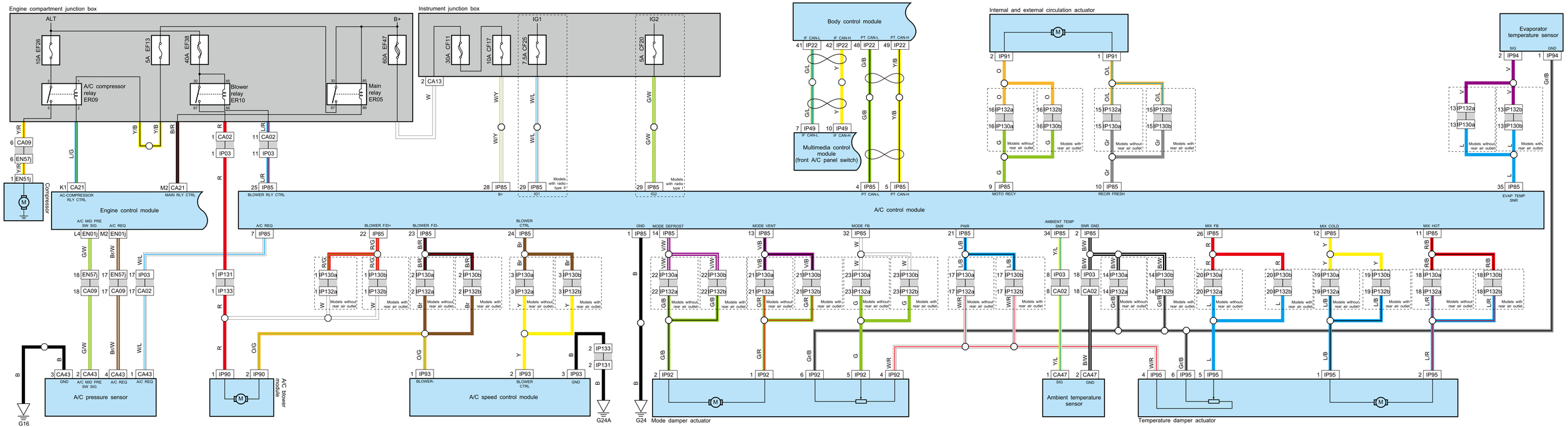

Electric A/C (models with radio BHE15-AFD)

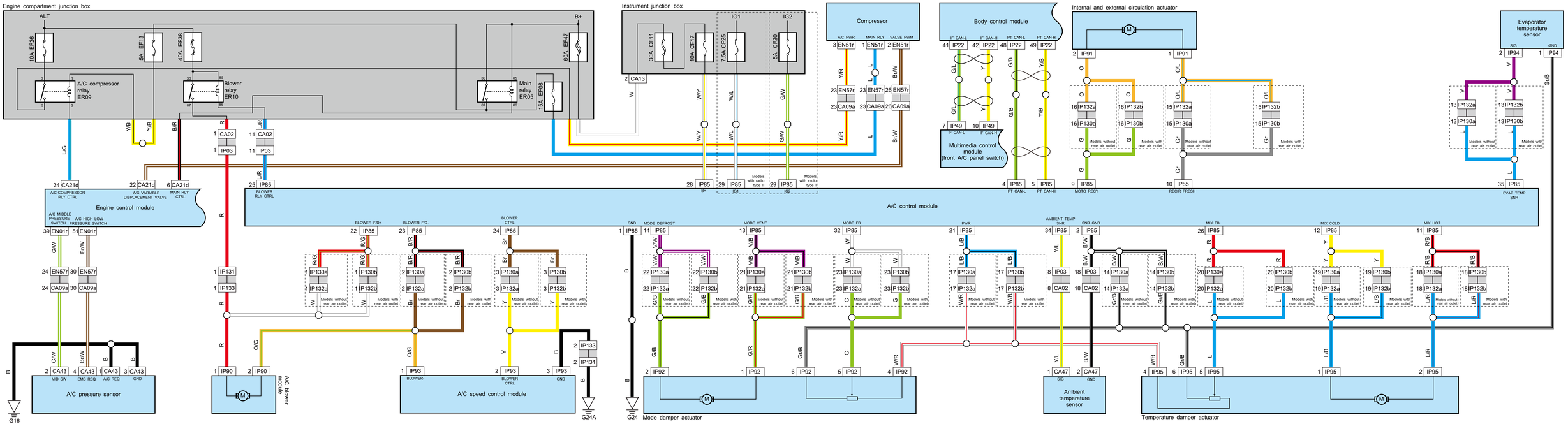

Electric A/C (models with LCD combination instrument JLF-3G10T)

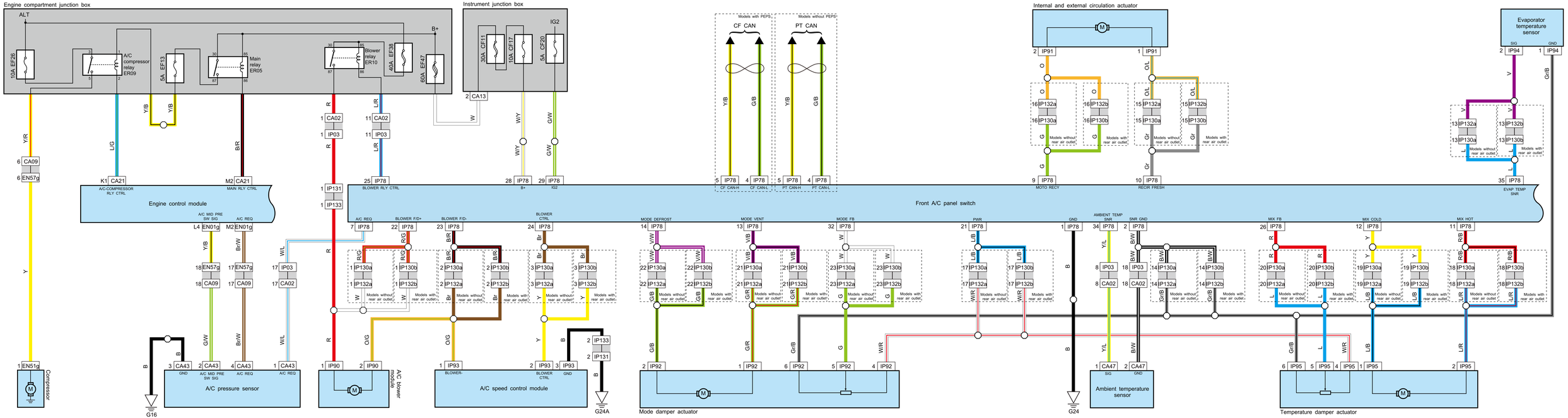

Electric A/C (models with LCD combination instrument JLC-4G15B)

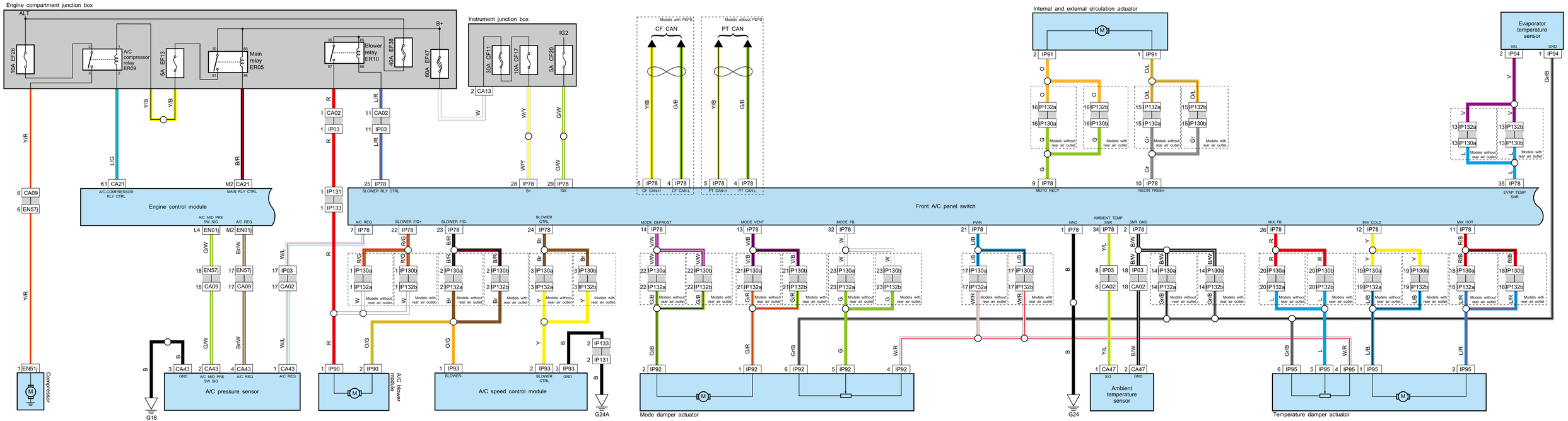

Electric A/C (models with LCD combination instrument BHE15-AFDT)

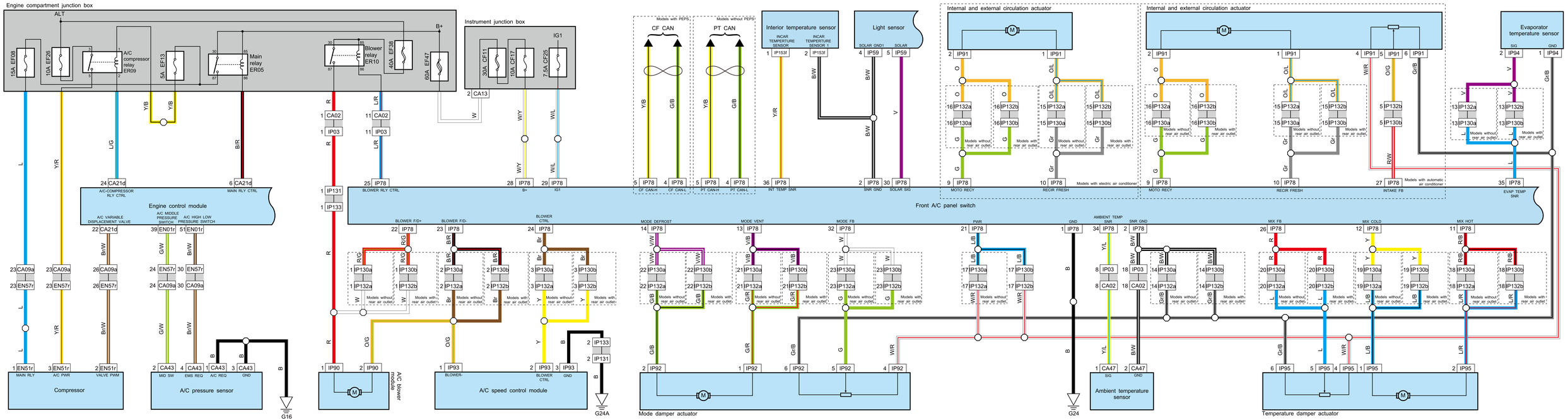

Defrosting control system

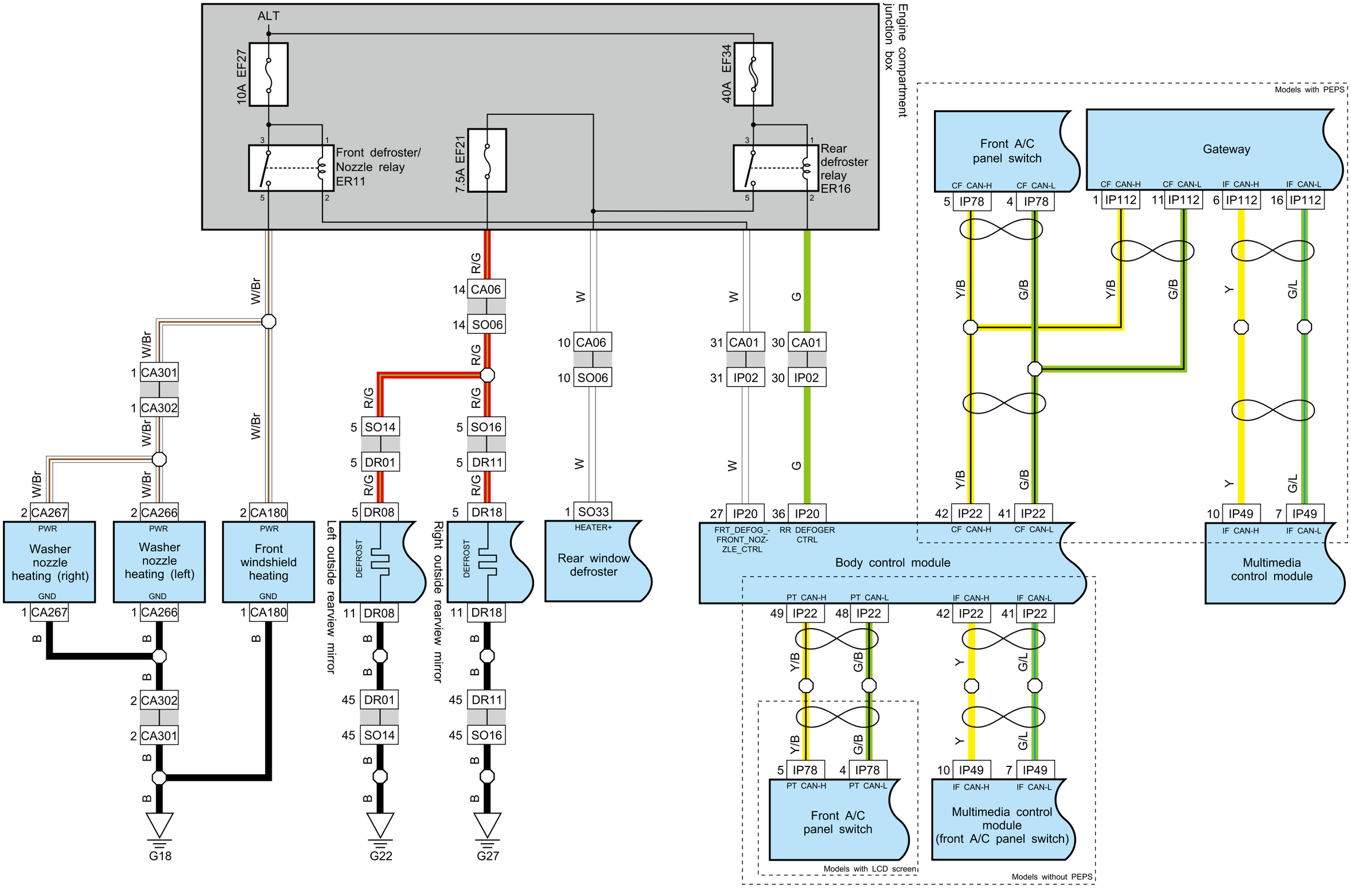

Air purifier

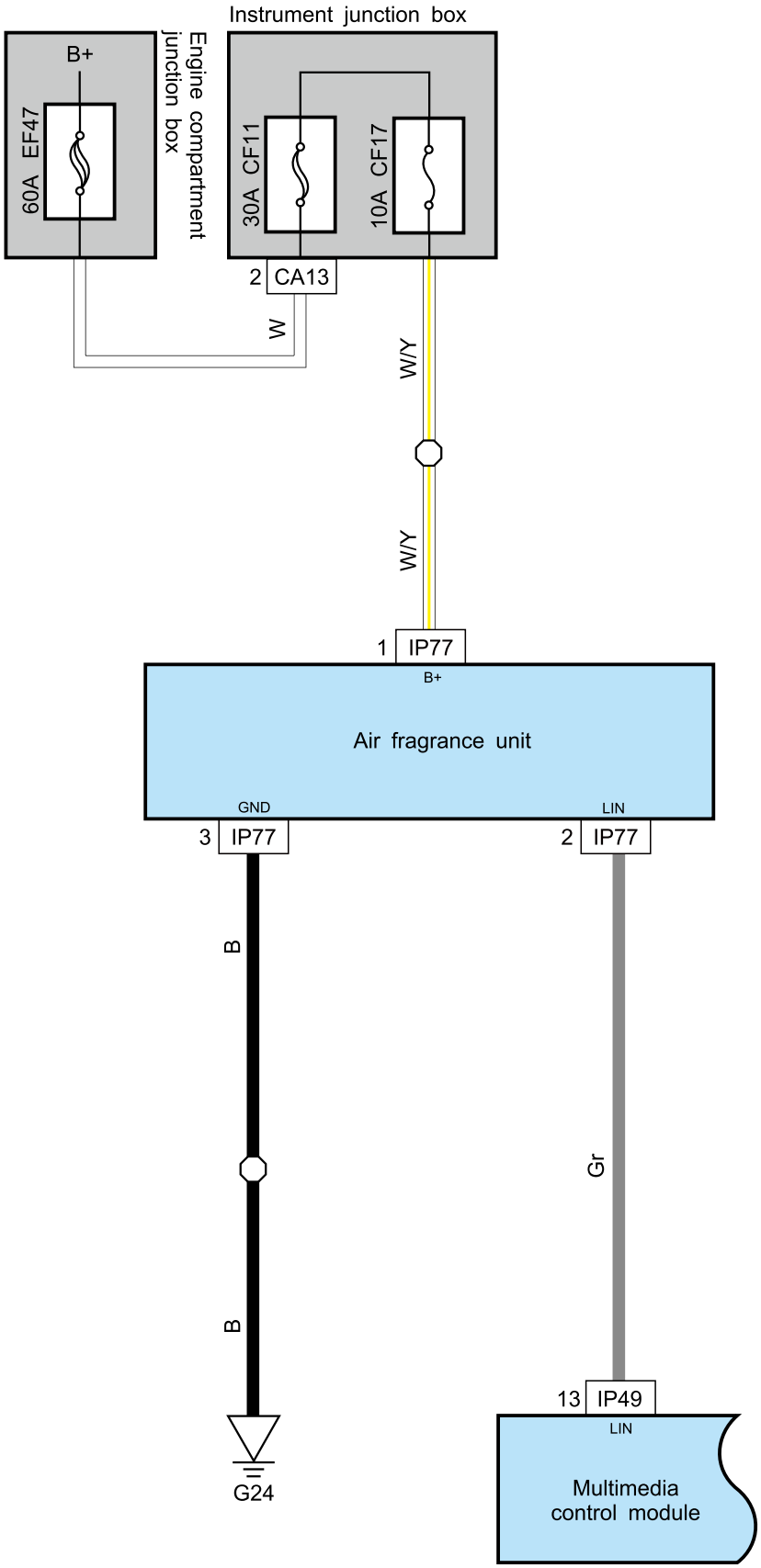

Multimedia control module

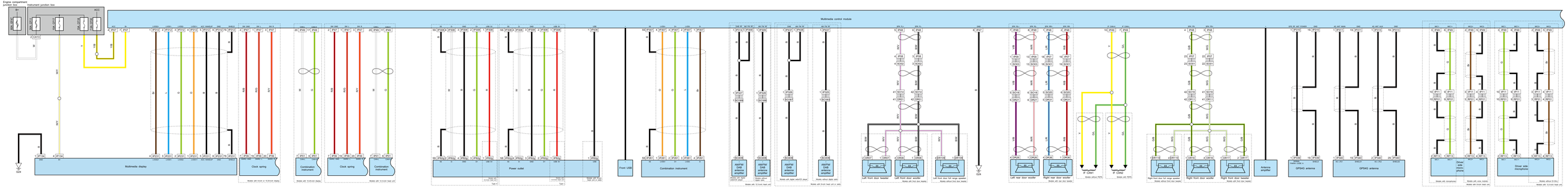

E-CALL

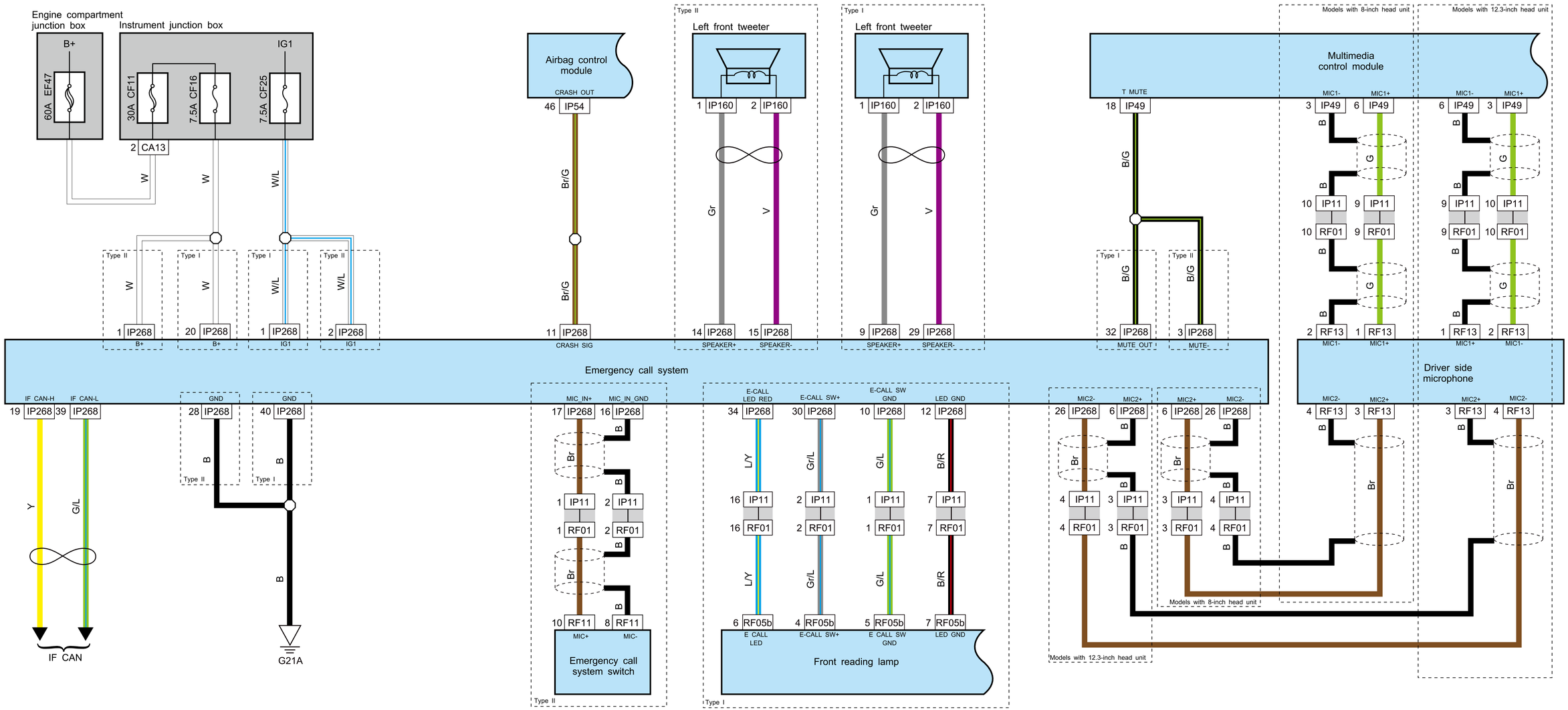
Engine compartment junction box
Instrument junction box
B+
IG1
60A EF47
30A CF11
7.5A CF16
7.5A CF25
2 CA13
W
W
W/L
Type II
Type I
Type I
Type II
1 IP268 B+
20 IP268 B+
1 IP268 IG1
2 IP268 IG1
Airbag control module
CRASH OUT
46 IP54
Br/G
Br/G
11 IP268 CRASH SIG
Type II
Left front tweeter
1 IP160
2 IP160
Gr
V
14 IP268 SPEAKER+
15 IP268 SPEAKER-
Type I
Left front tweeter
1 IP160
2 IP160
Gr
V
9 IP268 SPEAKER+
29 IP268 SPEAKER-
Models with 8-inch head unit
Models with 12.3-inch head unit
Multimedia control module
T MUTE
18 IP49
B/G
Type I
Type II
B/G
B/G
32 IP268 MUTE_OUT
3 IP268 MUTE-
MIC1-
MIC1+
3 IP49
6 IP49
10 IP11
9 IP11
10 RF01
9 RF01
2 RF13
1 RF13
B
G
Emergency call system
IF CAN-H
IF CAN-L
19 IP268
39 IP268
Y
G/L
IF CAN
GND
28 IP268
40 IP268
Type II
Type I
B
G21A
MIC_IN+
MIC_IN_GND
17 IP268
16 IP268
Br
1 IP11
2 IP11
1 RF01
2 RF01
10 RF11
8 RF11
MIC+
MIC-
Emergency call system switch
Type II
E-CALL LED RED
E-CALL SW+
E-CALL SW GND
LED GND
34 IP268
30 IP268
10 IP268
12 IP268
L/Y
Gr/L
G/L
B/R
16 IP11
2 IP11
1 IP11
7 IP11
16 RF01
2 RF01
1 RF01
7 RF01
6 RF05b
4 RF05b
5 RF05b
7 RF05b
E CALL LED
E-CALL SW+
E CALL SW GND
LED GND
Front reading lamp
Type I
MIC2-
MIC2+
26 IP268
6 IP268
4 IP11
3 IP11
4 RF01
3 RF01
Br
Models with 8-inch head unit
Models with 12.3-inch head unit
4 RF13
3 RF13
Driver side microphone

Driving recorder

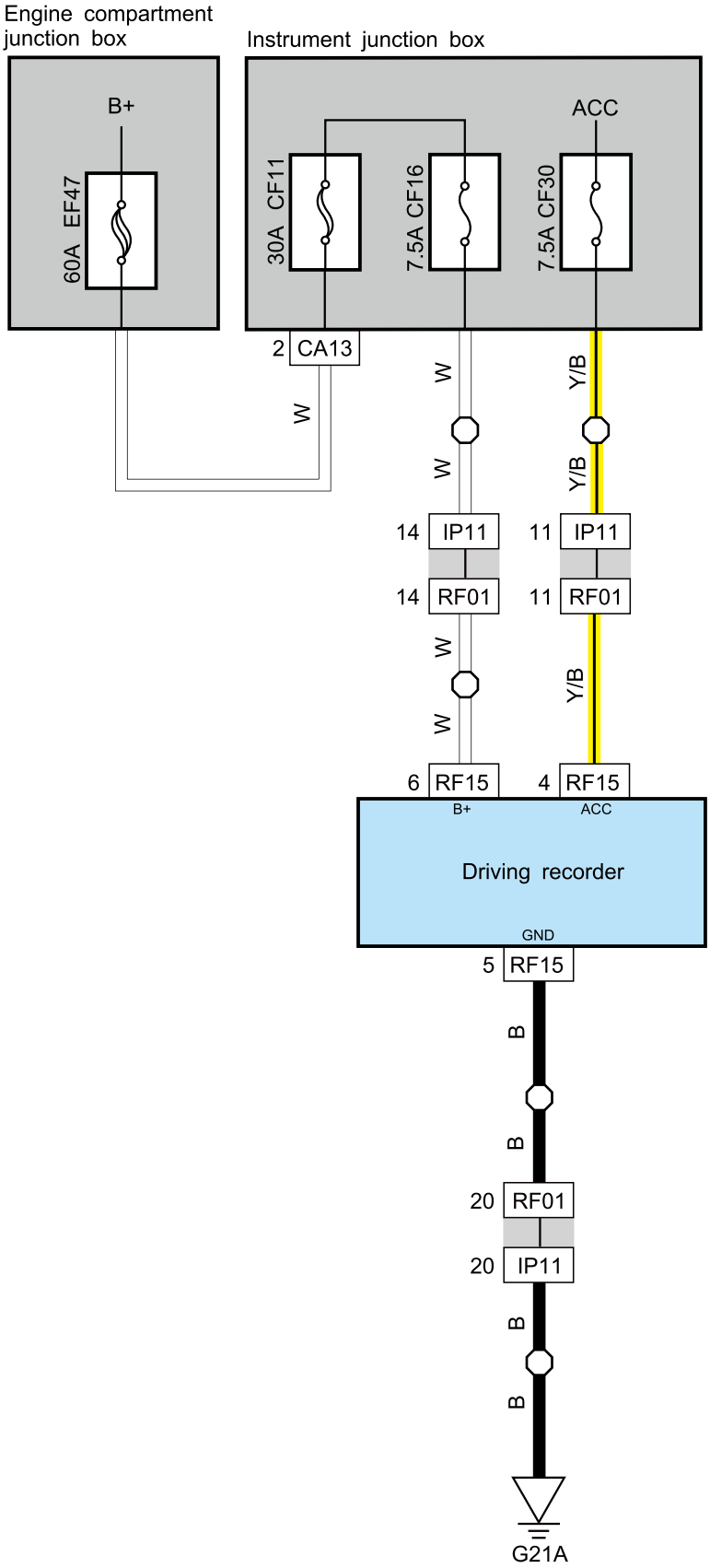

Reverse radar

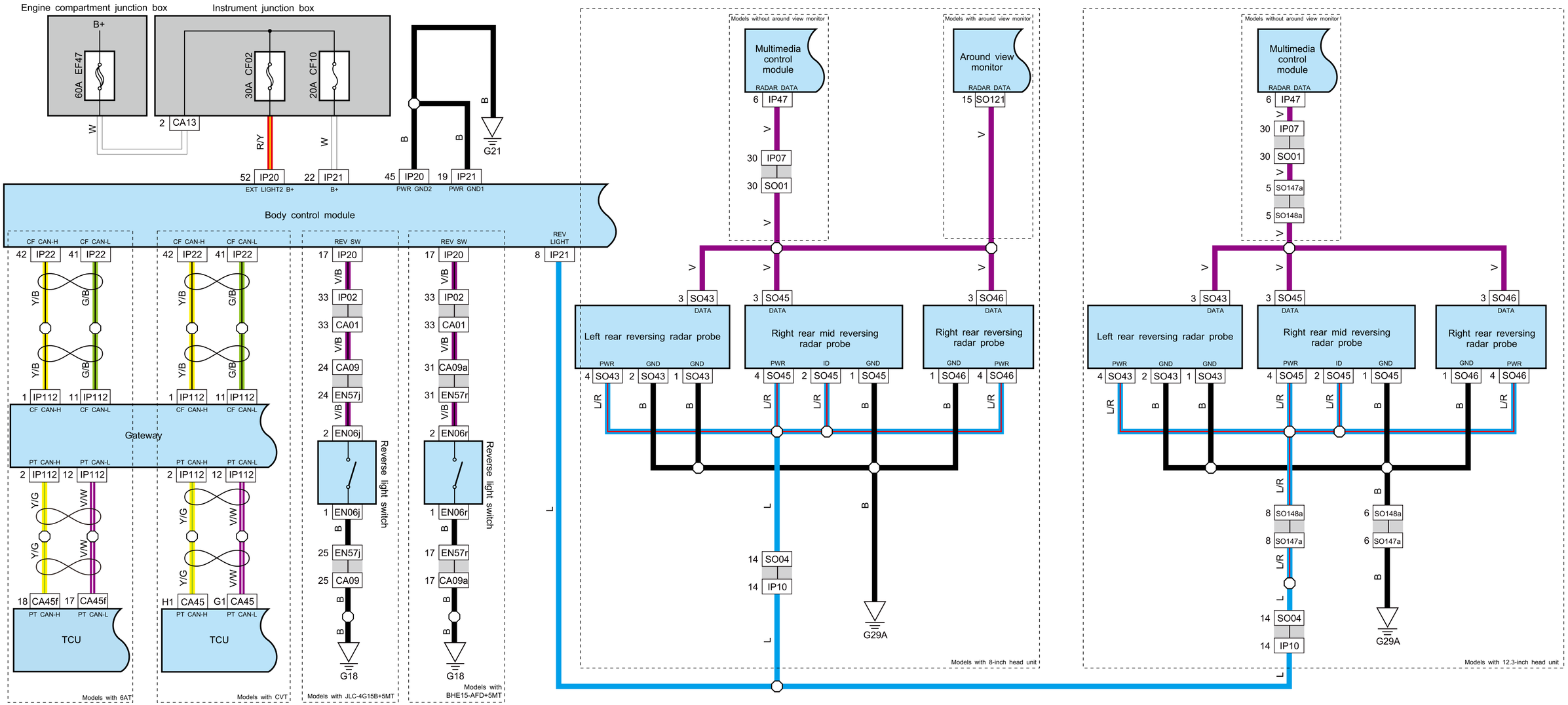

Rear view camera

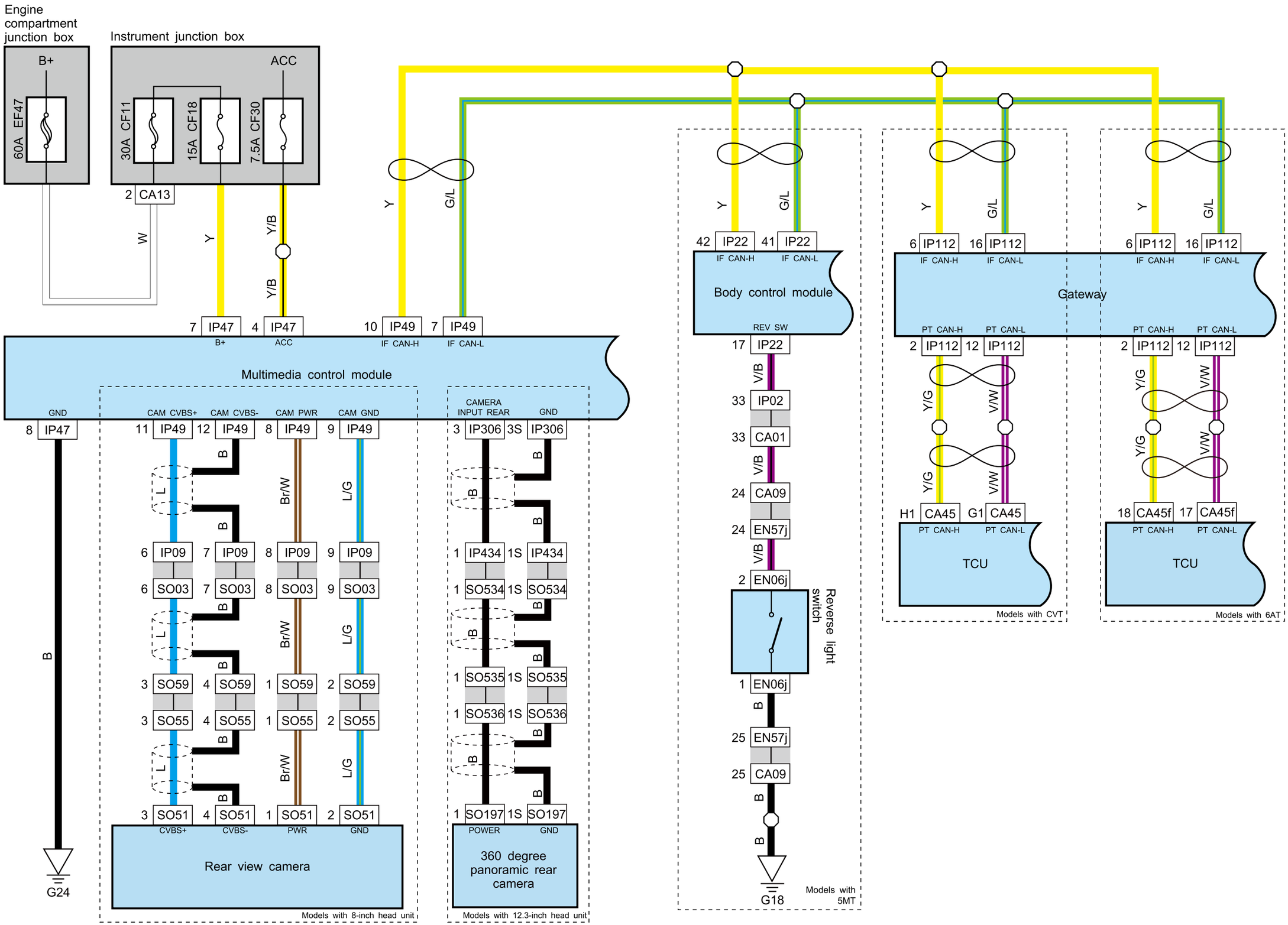

Around view monitor

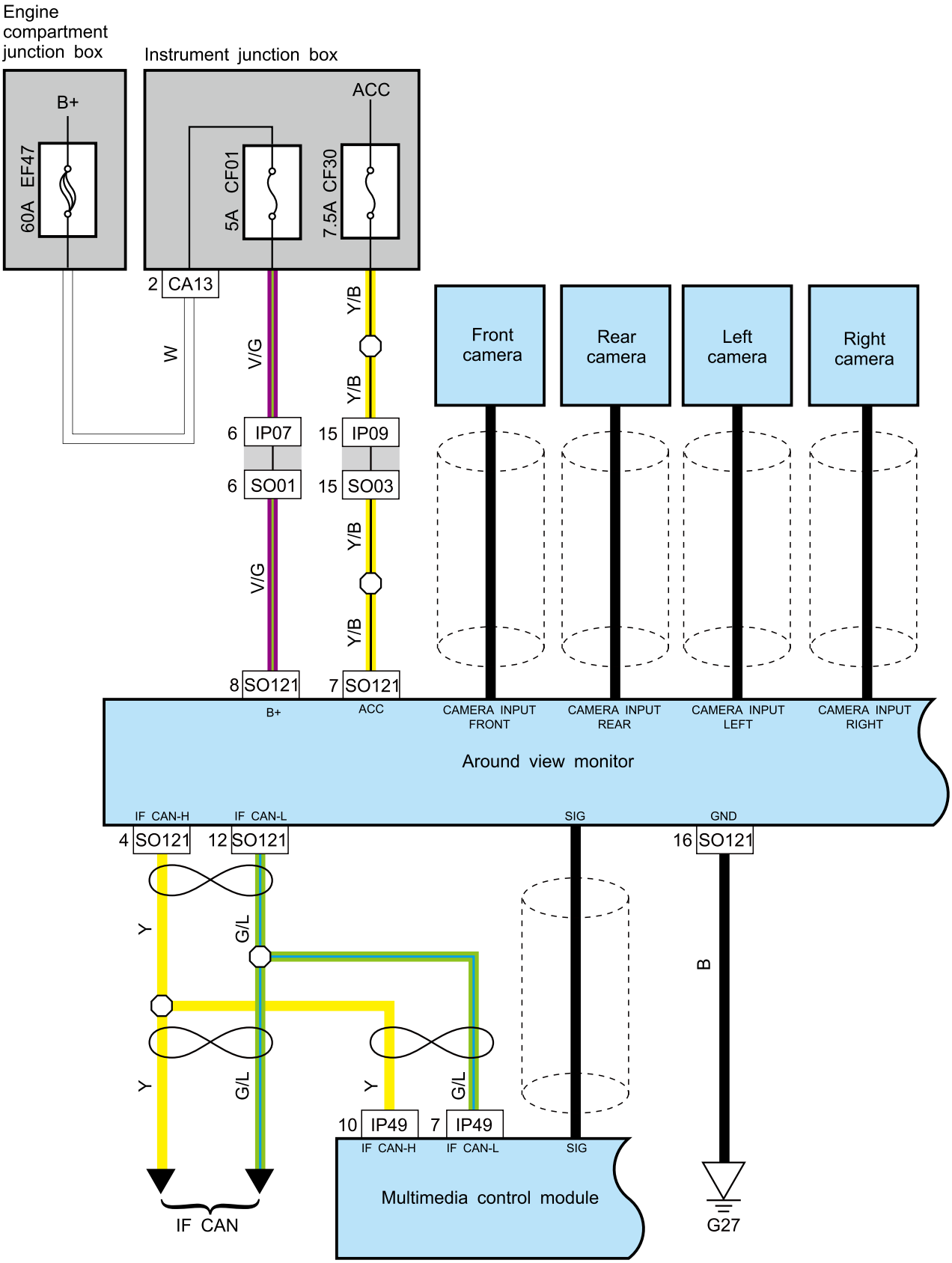

Around view monitor (models with multimedia control module)

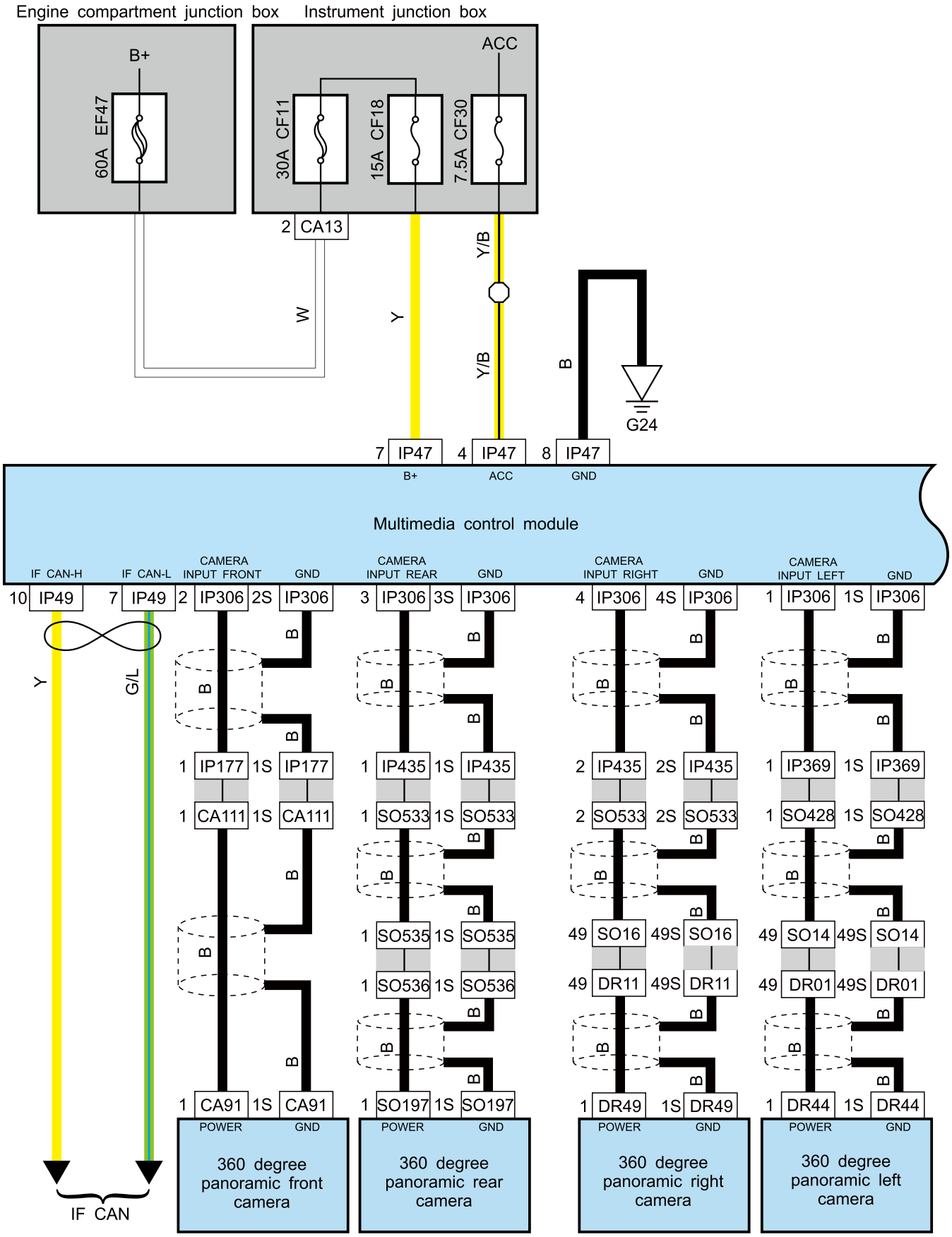

Airbag control system

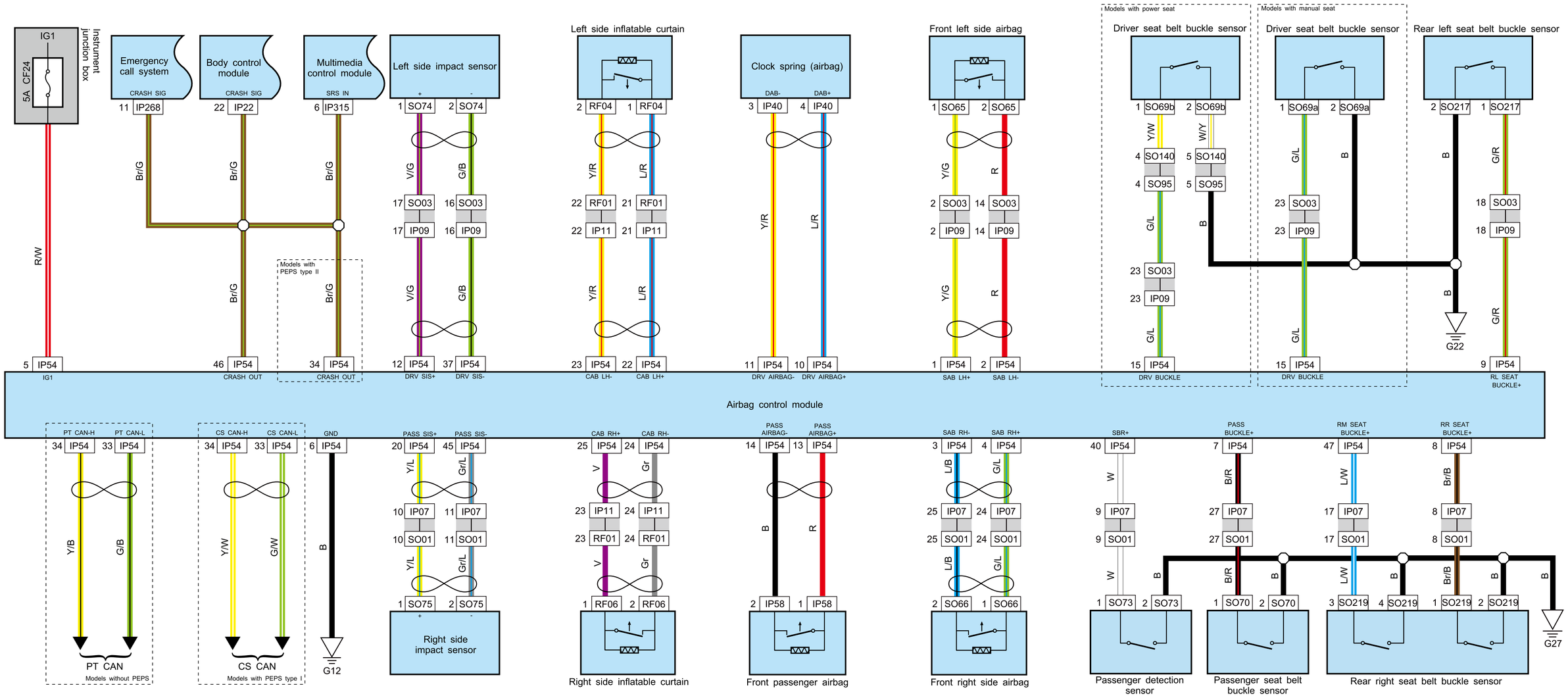

Horn

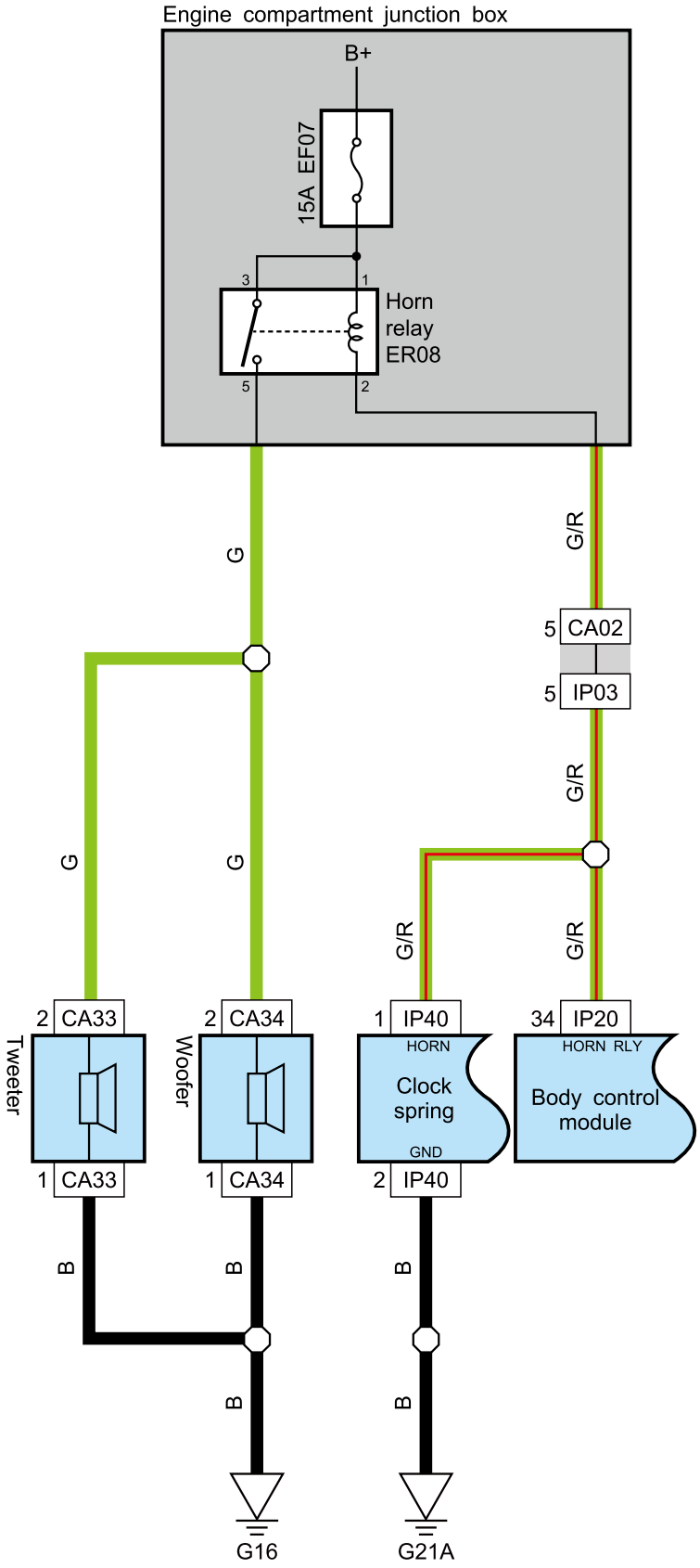
Engine compartment junction box
B+
15A EF07
3
1
Horn
relay
ER08
5
2
G
G/R
5 CA02
5 IP03
G/R
G
G
G/R
G/R
2 CA33
Tweeter
1 CA33
2 CA34
Woofer
1 CA34
1 IP40
HORN
Clock
spring
GND
2 IP40
34 IP20
HORN RLY
Body control
module
B
B
B
B
B
G16
G21A

On-board power supply

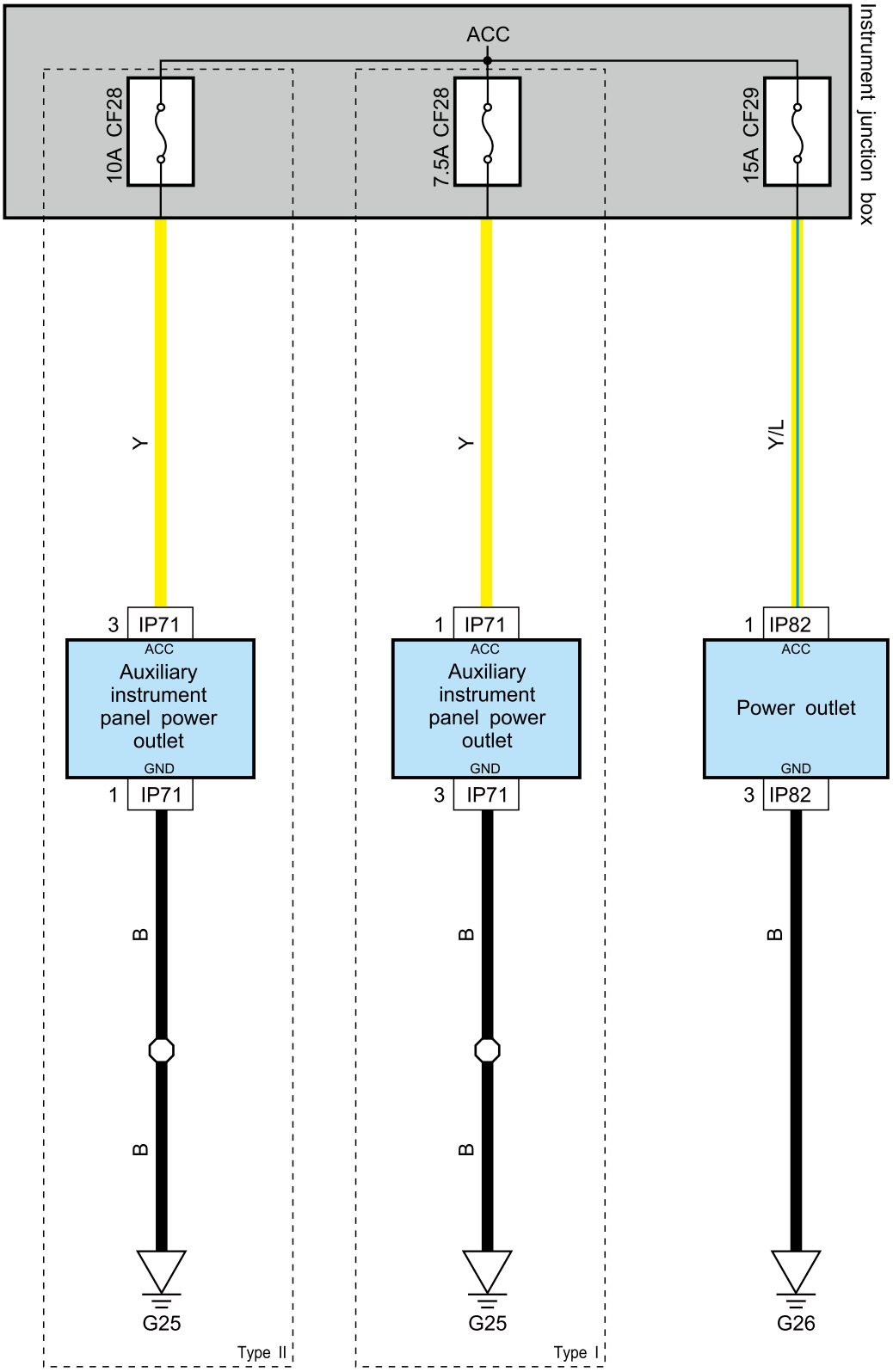

Power window (models with anti-pinch function)

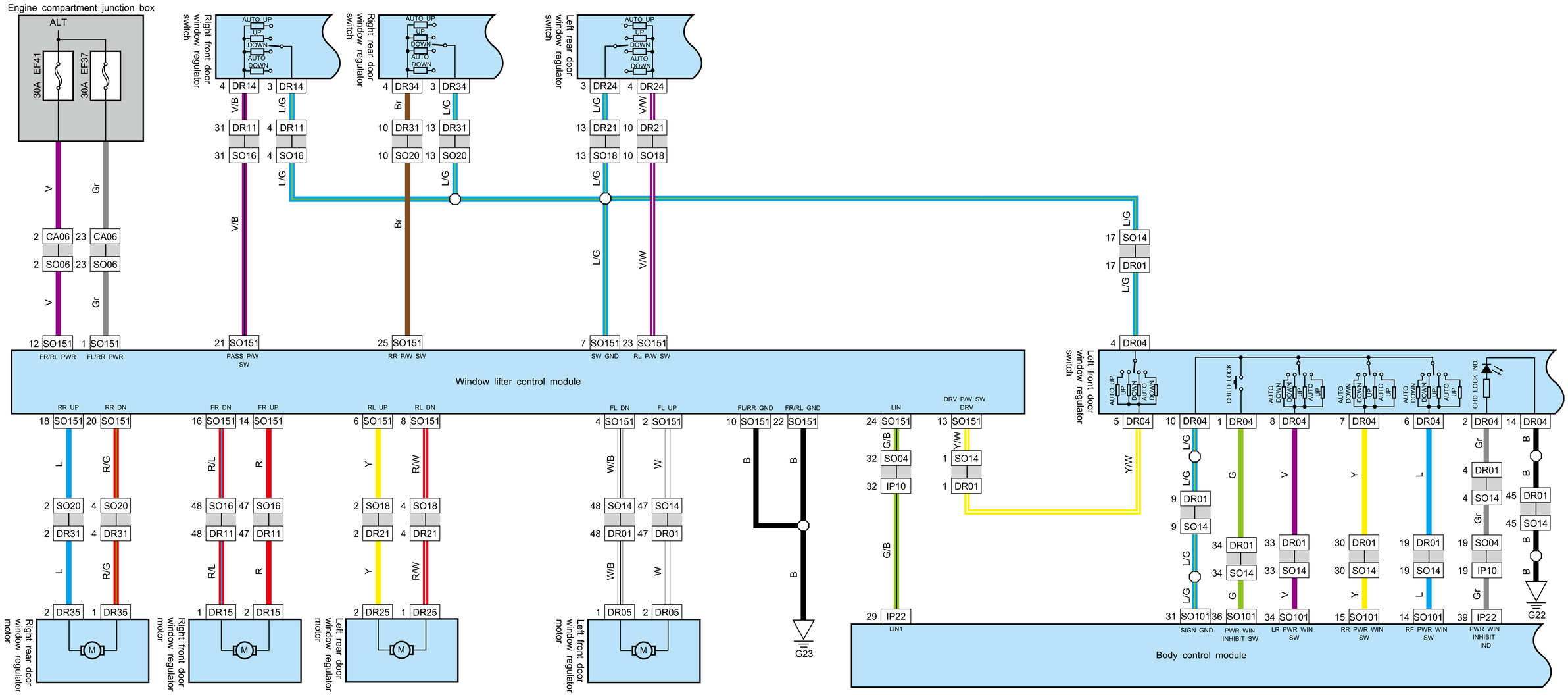

Power window (models without anti-pinch function)

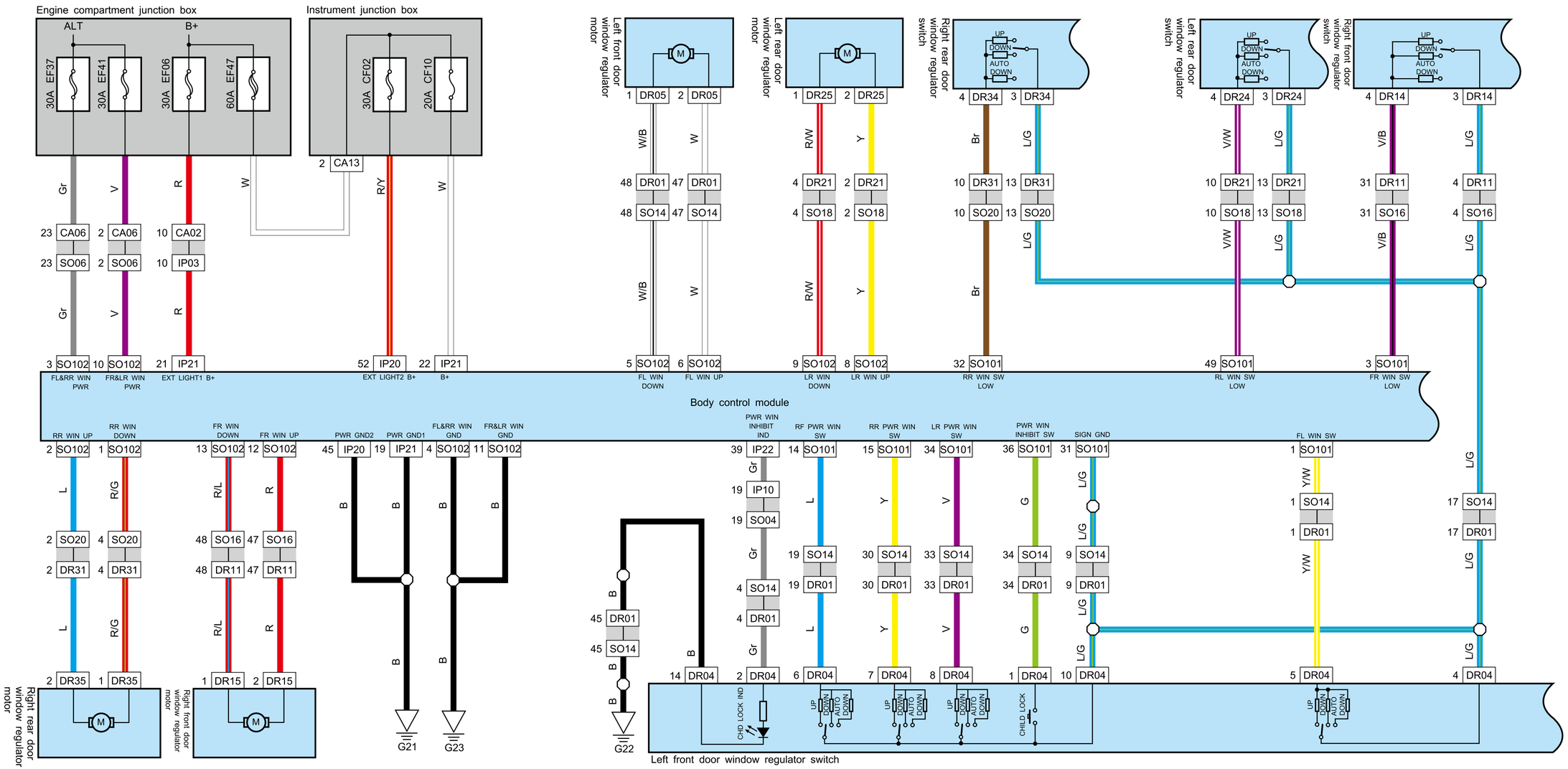

Power window (models with ripple anti-pinch function)

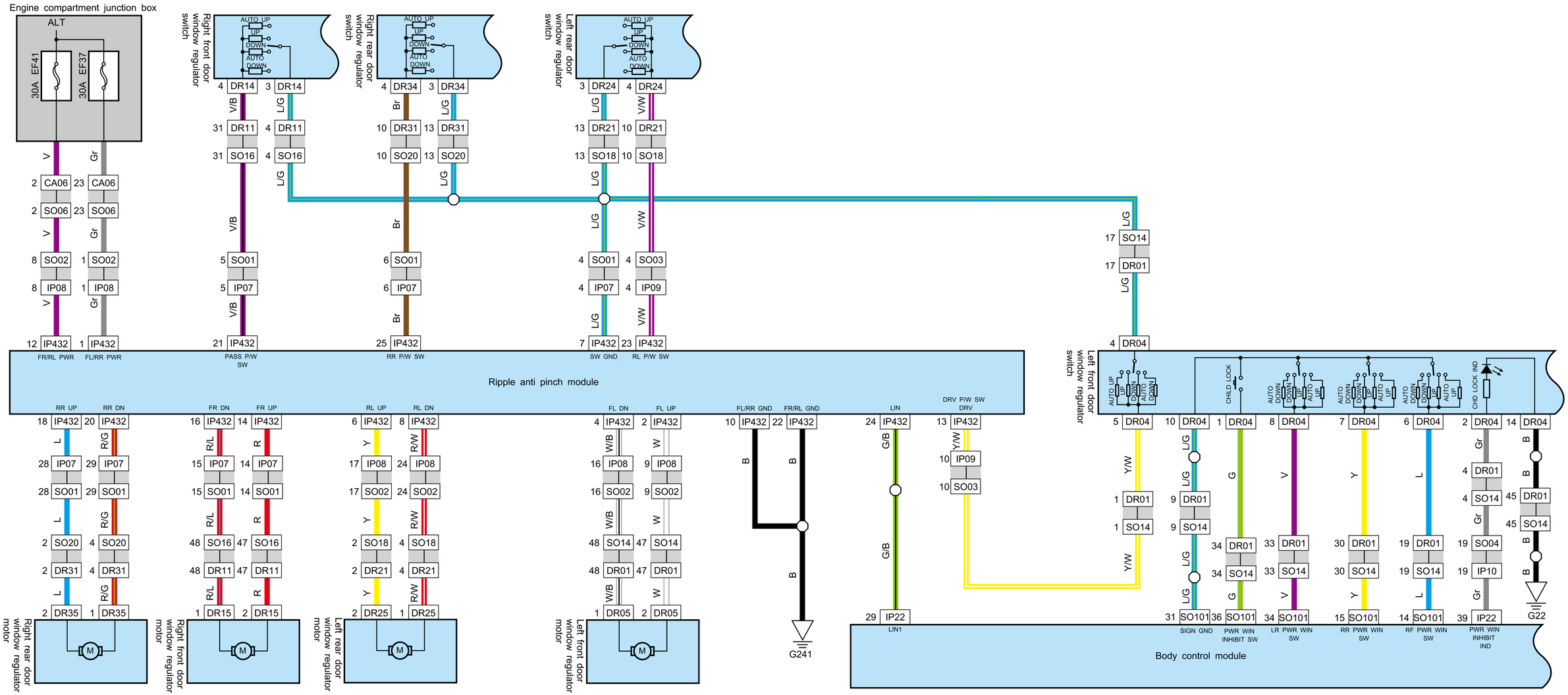

Power Sunroof

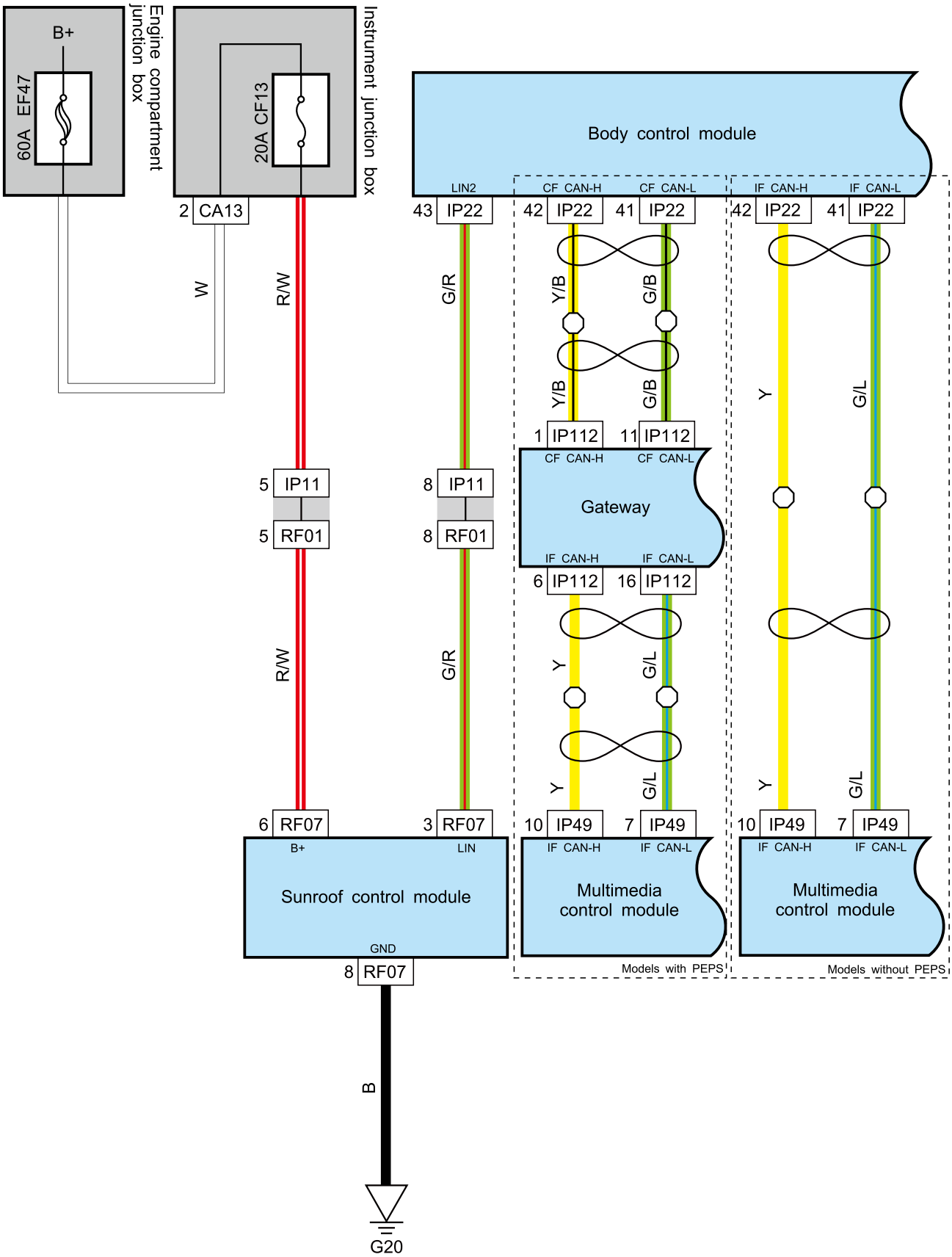

ETC

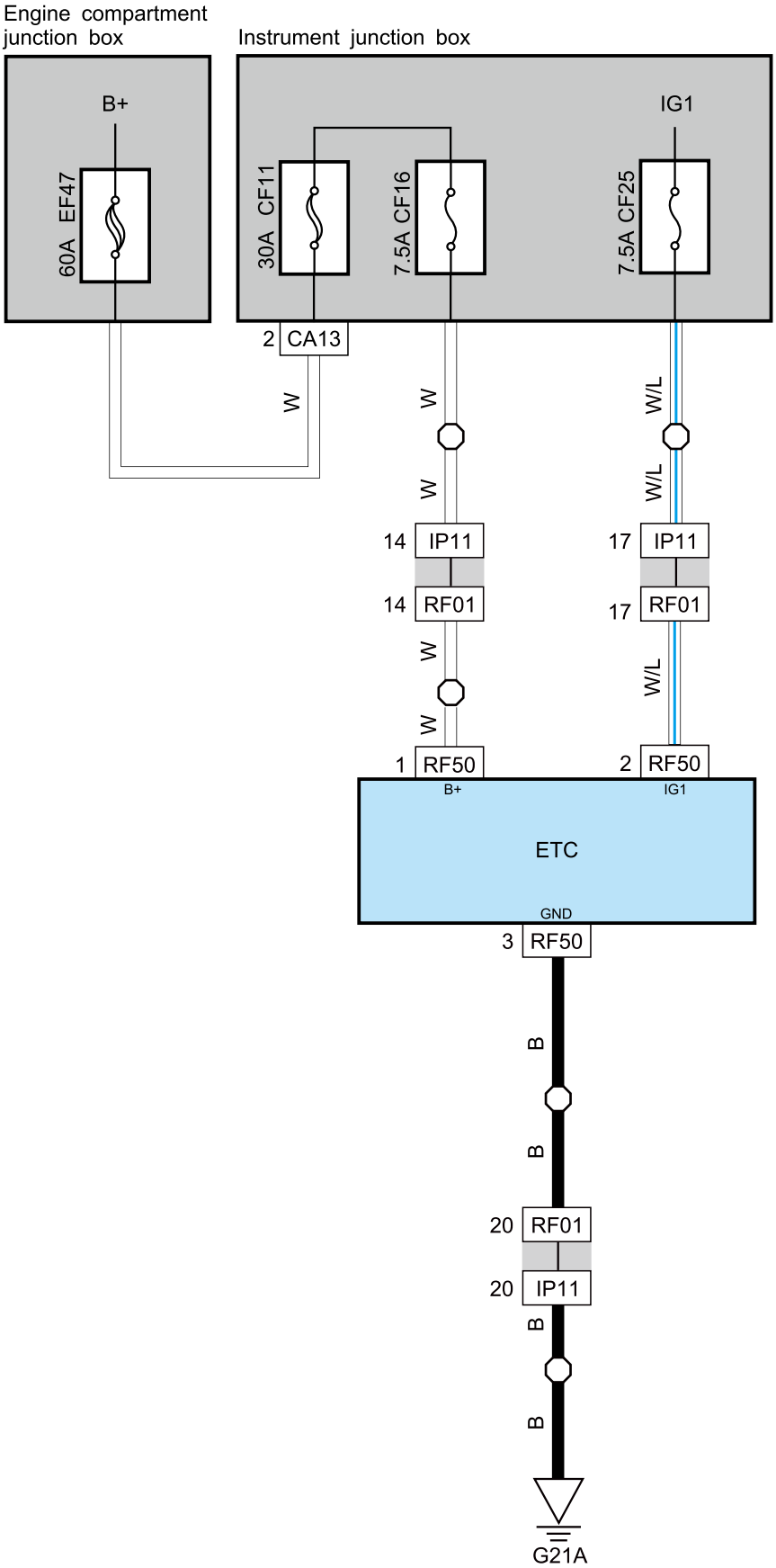
Engine compartment junction box
Instrument junction box
B+
60A EF47
30A CF11
7.5A CF16
IG1
7.5A CF25
2 CA13
W
W
W
W/L
W/L
14 IP11
17 IP11
14 RF01
17 RF01
W
W
W/L
1 RF50
2 RF50
B+
IG1
ETC
GND
3 RF50
B
B
20 RF01
20 IP11
B
B
G21A

DLC

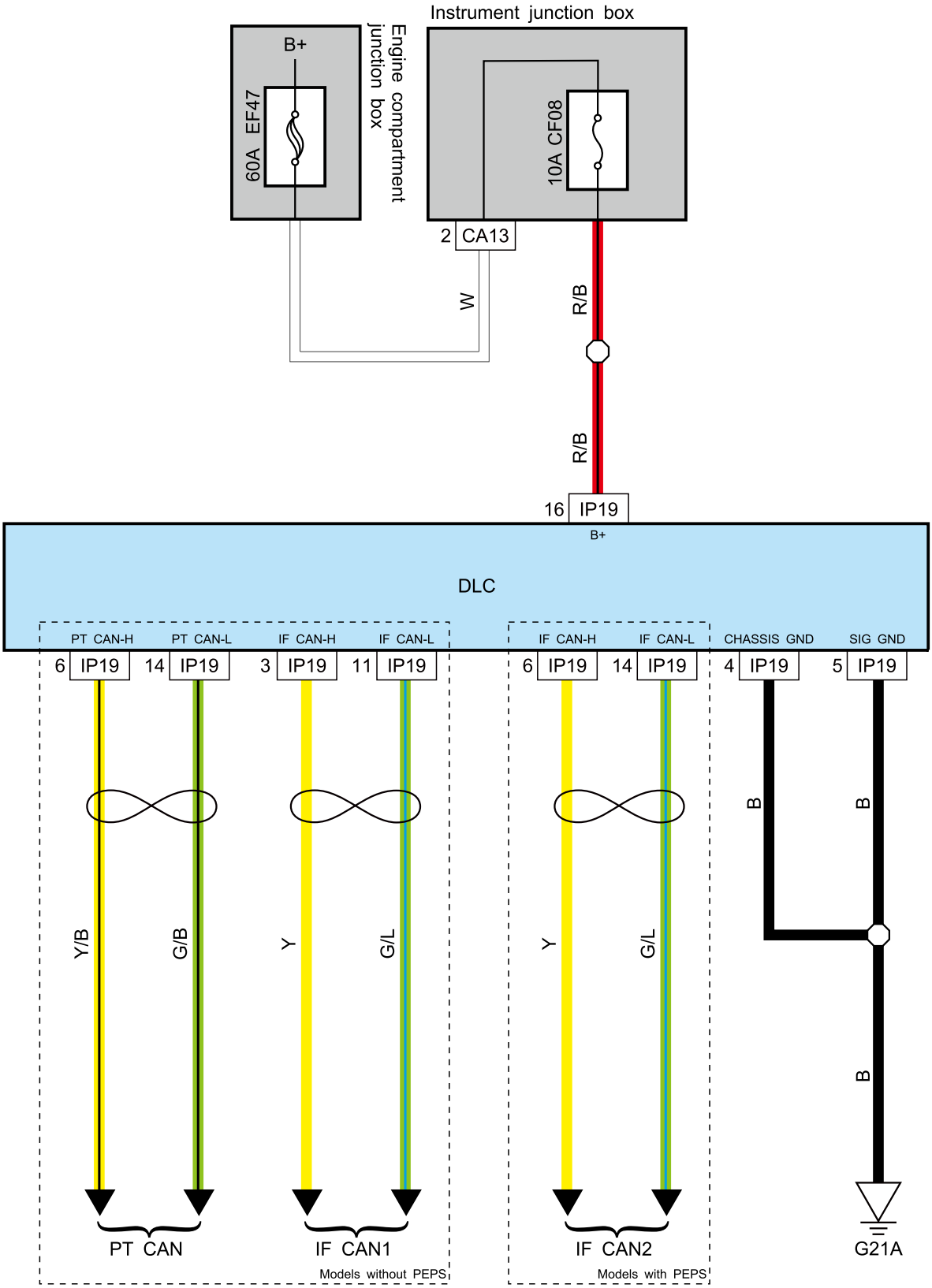
Instrument junction box
B+
60A EF47
Engine compartment junction box
10A CF08
2 CA13
W
R/B
R/B
16 IP19
B+
DLC
PT CAN-H
PT CAN-L
IF CAN-H
IF CAN-L
IF CAN-H
IF CAN-L
CHASSIS GND
SIG GND
6 IP19
14 IP19
3 IP19
11 IP19
6 IP19
14 IP19
4 IP19
5 IP19
Y/B
G/B
Y
G/L
Y
G/L
B
B
B
PT CAN
IF CAN1
Models without PEPS
IF CAN2
Models with PEPS
G21A

Gateway

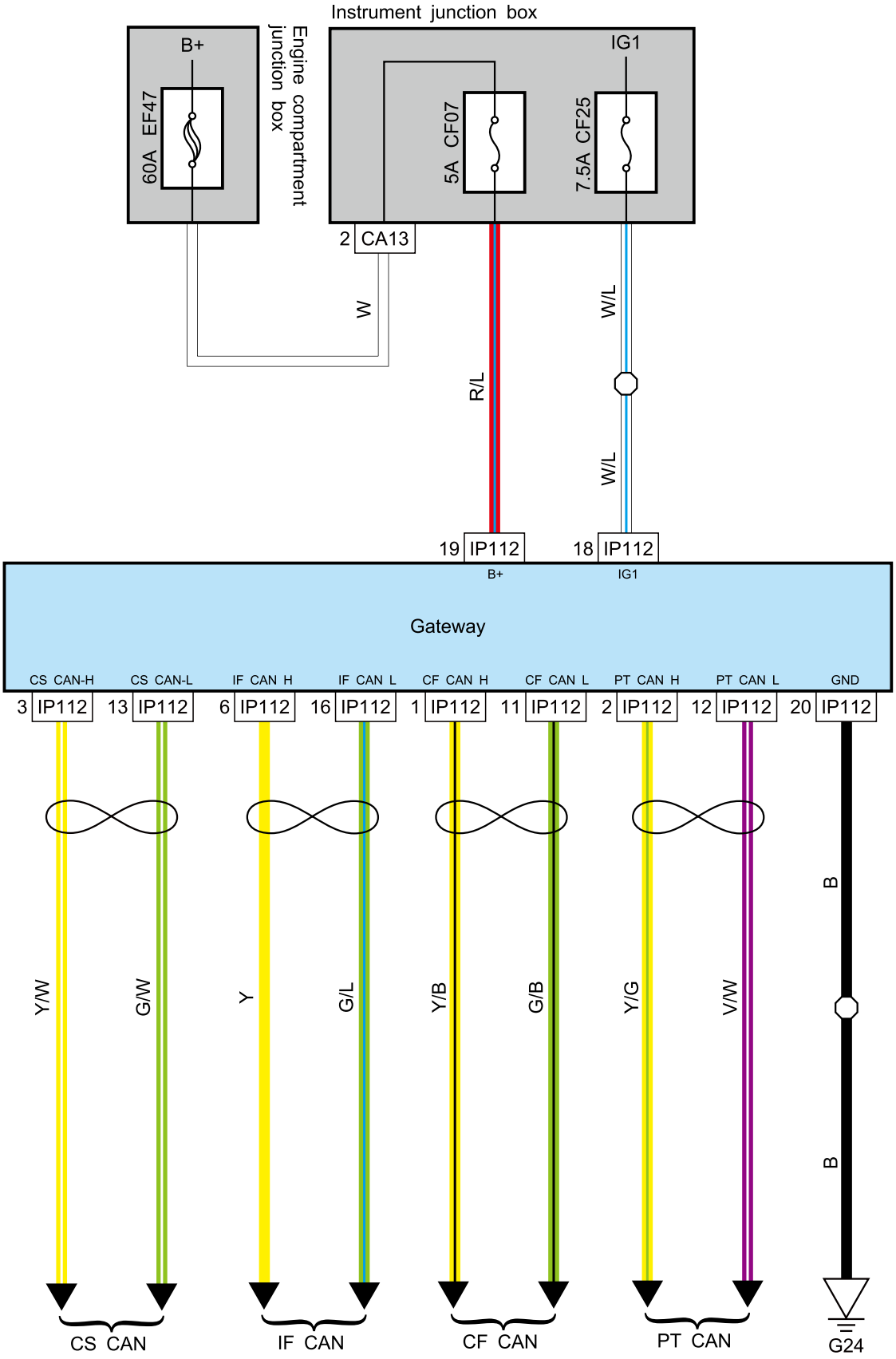
Instrument junction box
Engine compartment junction box
B+
60A EF47
IG1
5A CF07
7.5A CF25
2 CA13
W
R/L
W/L
W/L
19 IP112
B+
18 IP112
IG1
Gateway
CS CAN-H
CS CAN-L
IF CAN H
IF CAN L
CF CAN H
CF CAN L
PT CAN H
PT CAN L
GND
3 IP112
13 IP112
6 IP112
16 IP112
1 IP112
11 IP112
2 IP112
12 IP112
20 IP112
Y/W
G/W
Y
G/L
Y/B
G/B
Y/G
V/W
B
B
CS CAN
IF CAN
CF CAN
PT CAN
G24

Bus Communications Network (PT_CAN) (models with PEPS)

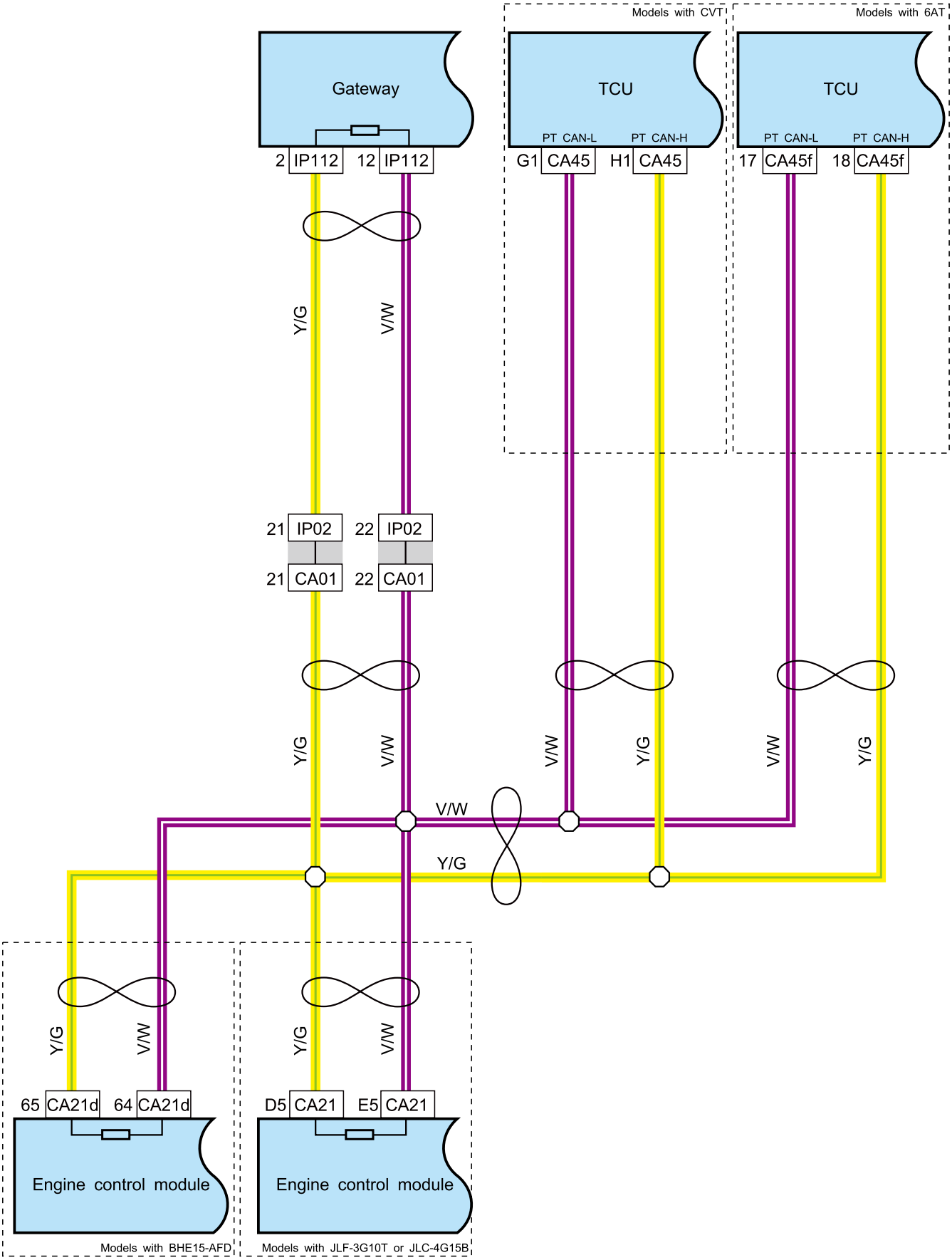

Bus Communications Network (IF_CAN) (models with PEPS)

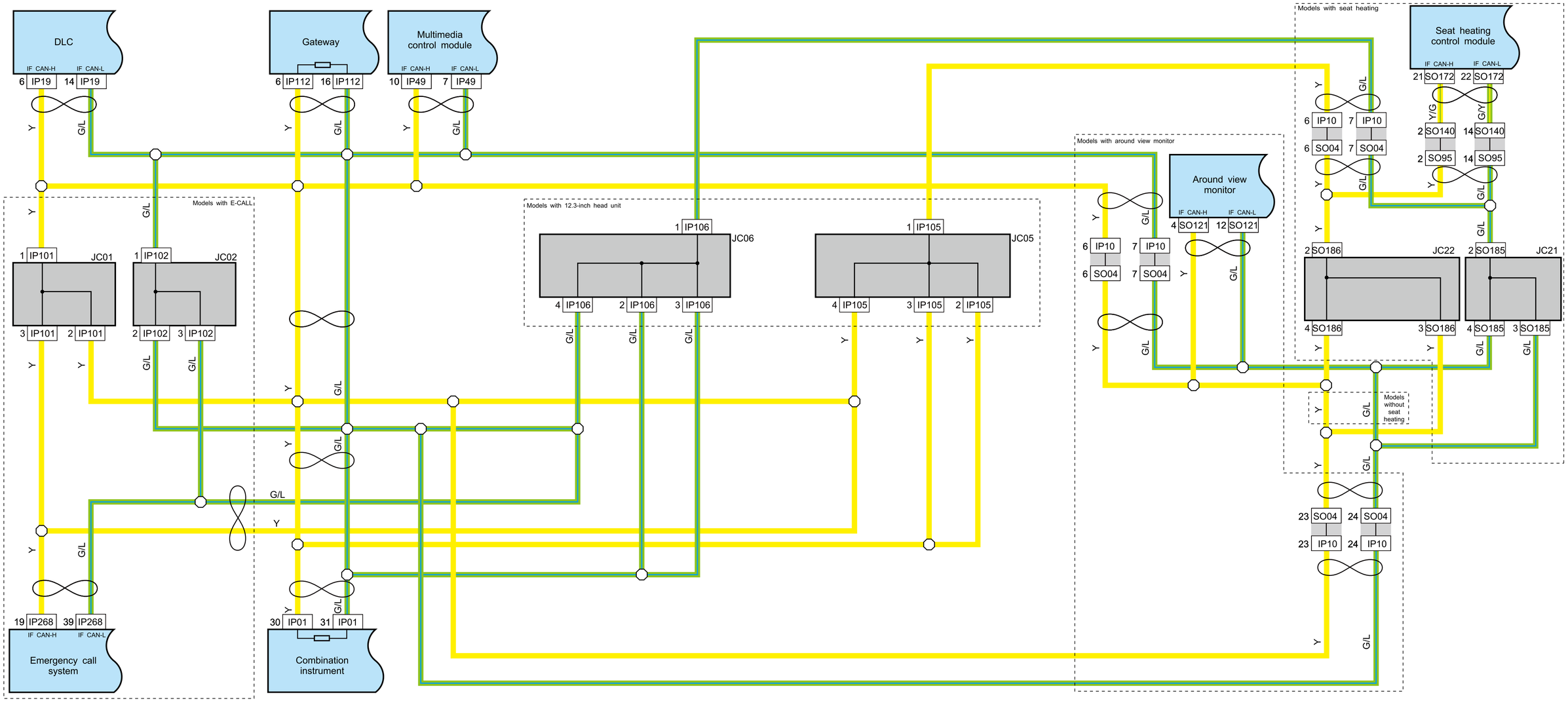

Bus Communications Network (CF_CAN) (models with PEPS)

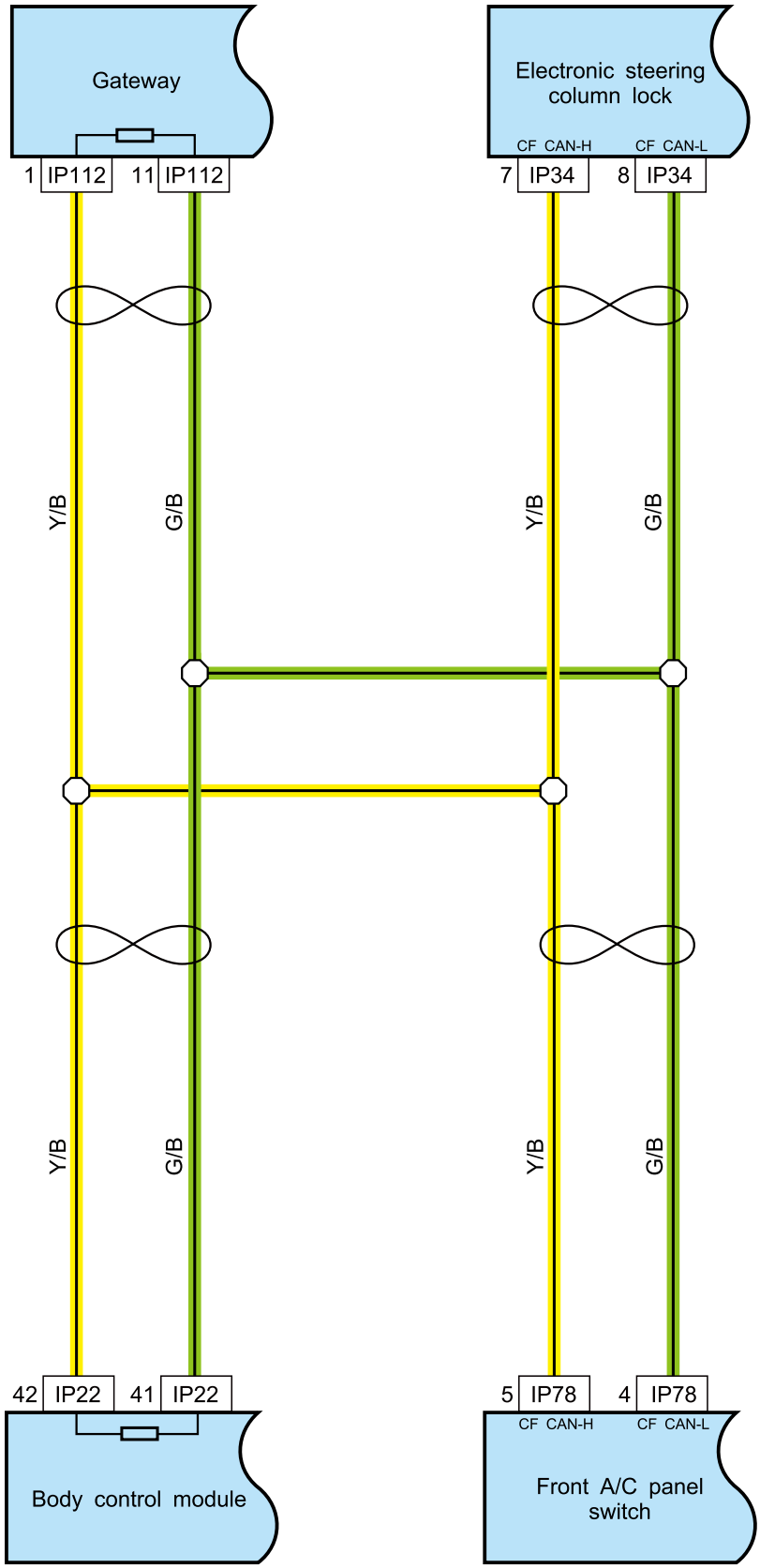

Bus Communications Network (CS_CAN) (models with PEPS)

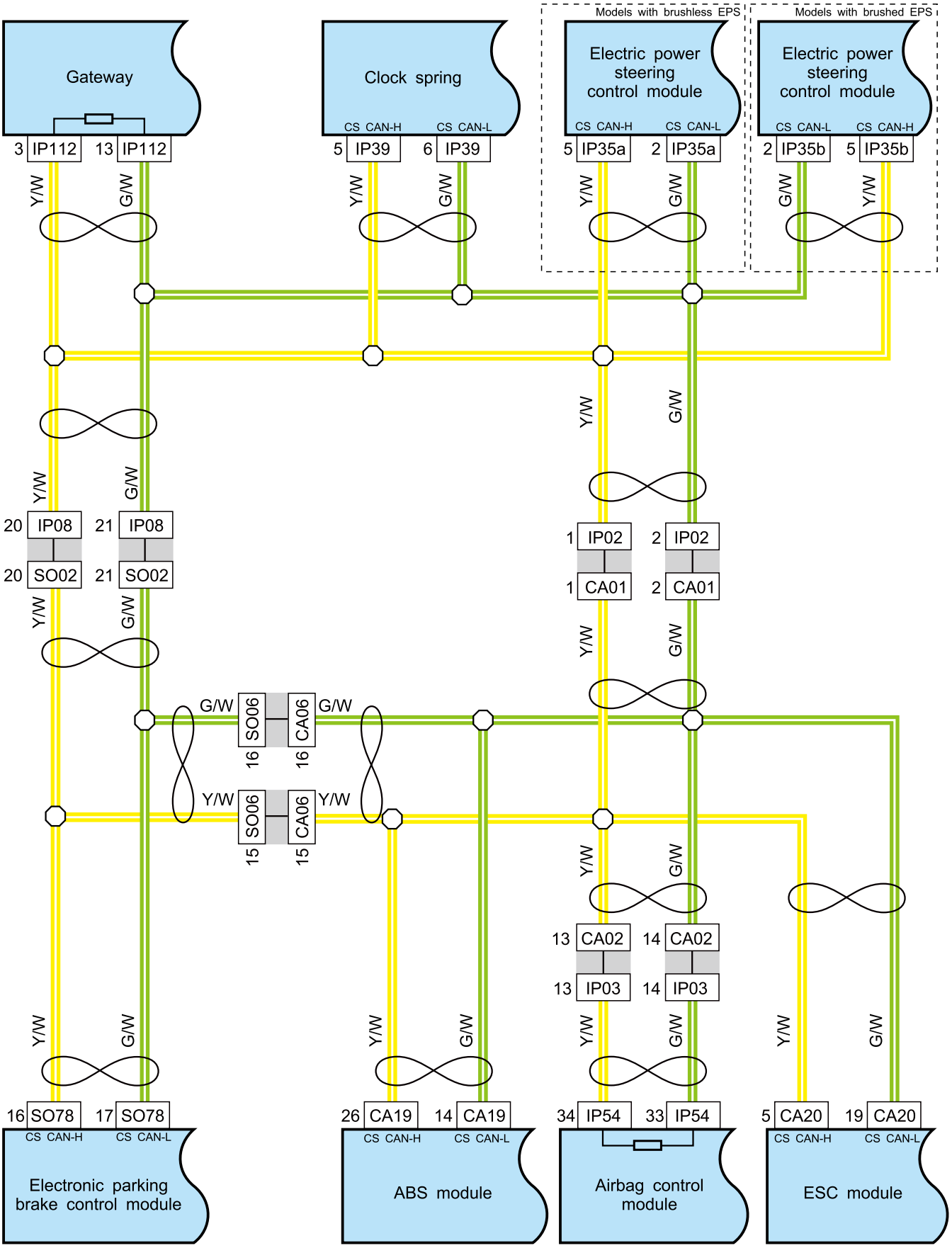

Bus Communications Network (PT_CAN) (models without PEPS)

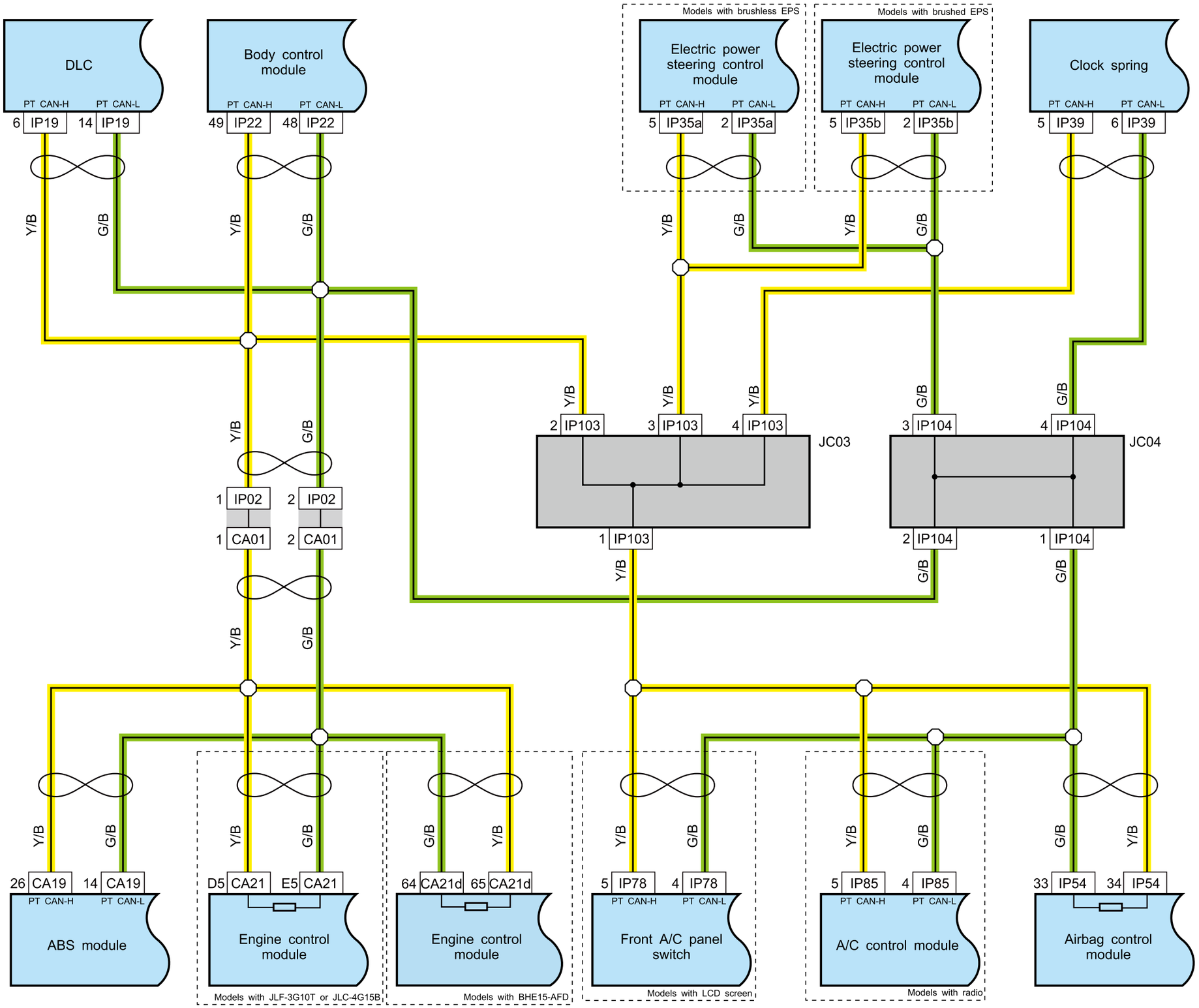
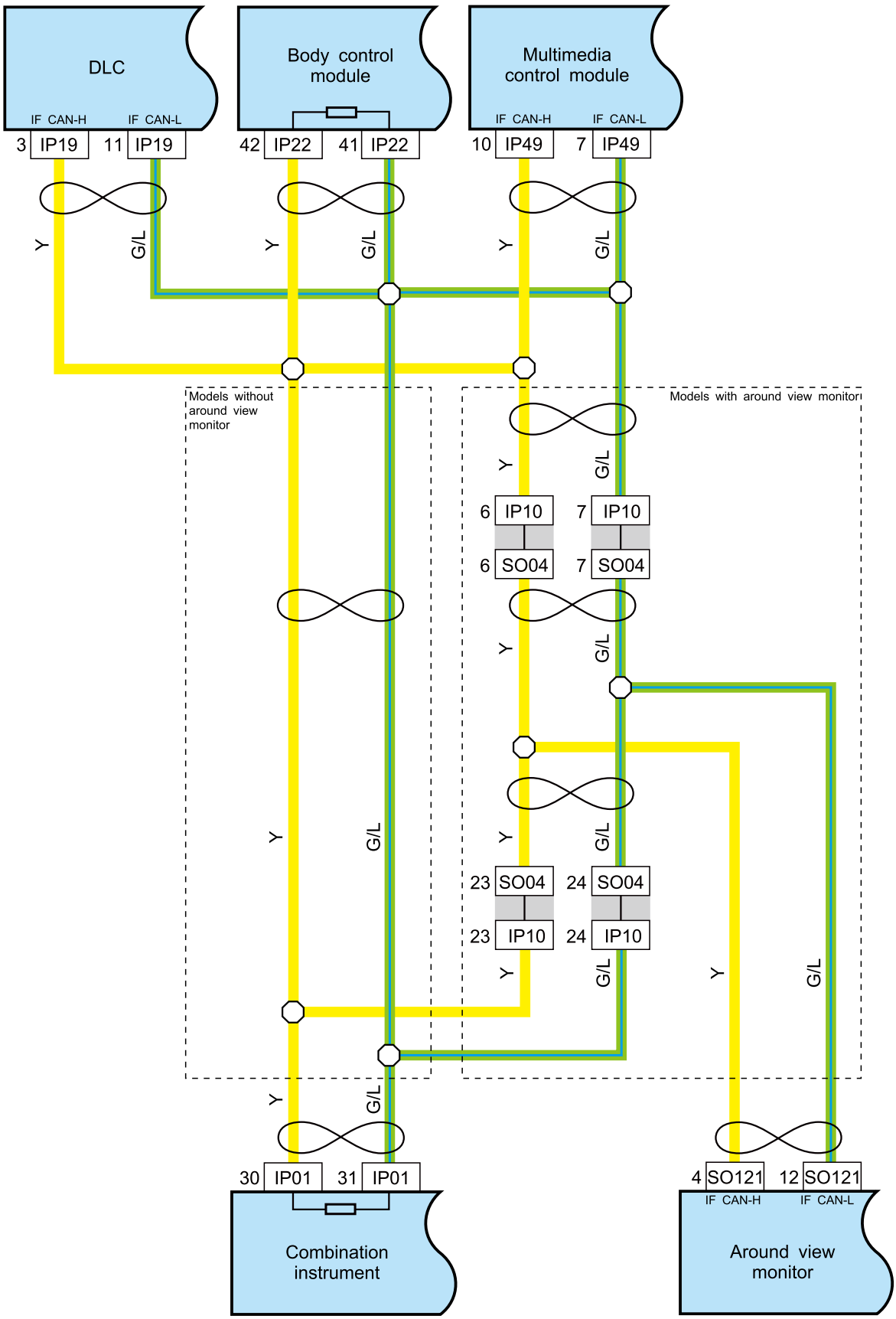
Bus Communications Network (IF_CAN) (models without PEPS)